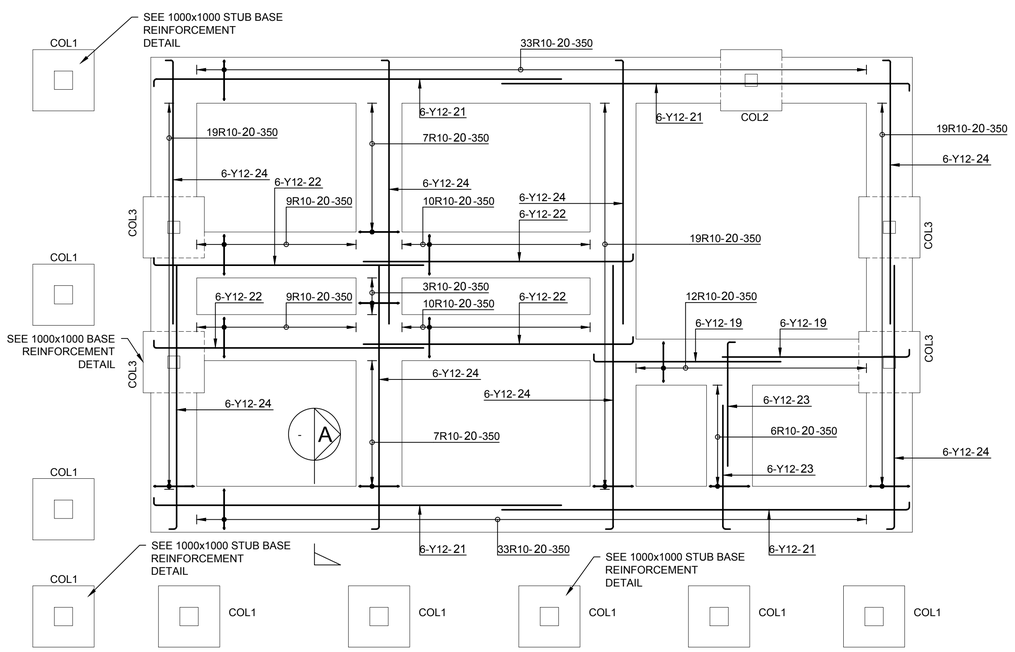

STRIP FOUNDATIONS REINFORCEMENT

SCALE 1 : 50

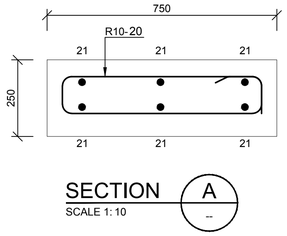

SECTION A
SCALE 1: 10

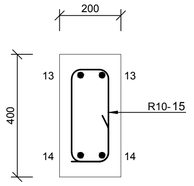

SECTION B
SCALE 1: 10

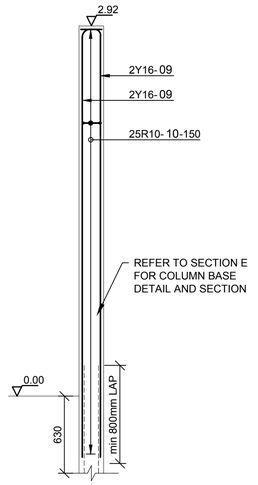

TYPICAL COLUMN 2 REINFORCEMENT

SCALE 1 : 25

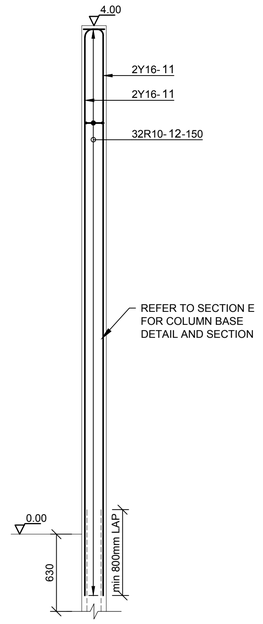

TYPICAL COLUMN 3 REINFORCEMENT

SCALE 1 : 25

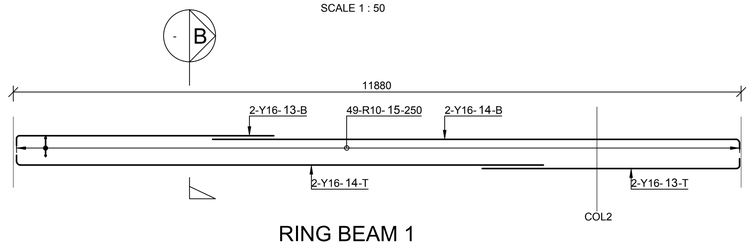

RING BEAM 1 REINFORCEMENT

SCALE 1 : 50

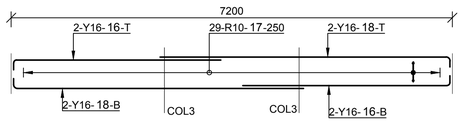

RING BEAM 2 REINFORCEMENT

SCALE 1 : 50

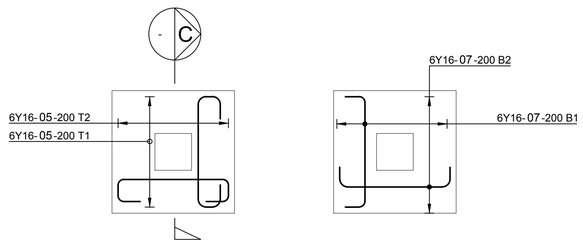

1000x1000 STUB BASE TYPICAL COL1 REINFORCEMENT

SCALE 1 : 25

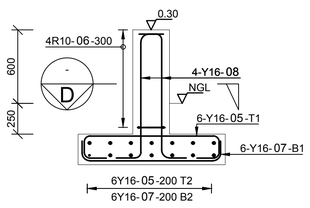

TYPICAL COLUMN 1

SECTION C
SCALE 1: 25

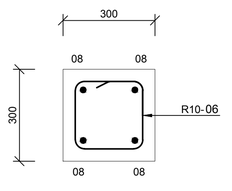

SECTION D
SCALE 1: 10

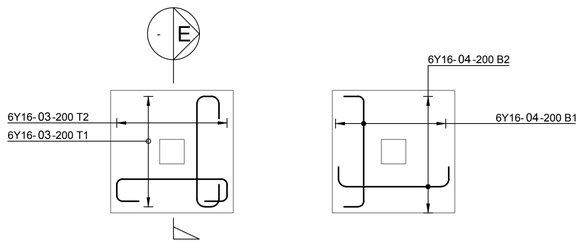

1000x1000 BASE TYPICAL REINFORCEMENT

SCALE 1 : 25

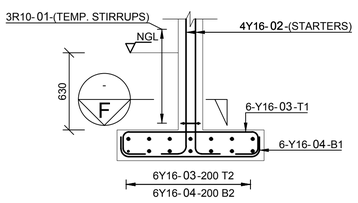

SECTION E
SCALE 1: 25

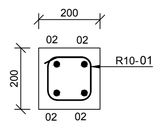

SECTION F
SCALE 1: 10

SCALE FOR REDUCED PLAN
0 10 20 30 40 50
50mm ON ORIGINAL DRAWING

NOTES

REFER TO STRUCTURAL GENERAL NOTES
EA-MZ-CI0000-WOR-B18-00001-01

REFER TO ARCHITECTS DRAWING
EA-MZ-CI0100-WOR-E04-00505-01

REFER TO LAYOUT DRAWING
EA-MZ-CI0100-WOR-E05-00656-01

REFER TO BENDING SCHEDULE 01
ON DRAWING EA-MZ-CI0100-WOR-E05-00060-01

ISSUED FOR CONSTRUCTION

WorleyParsons RSA retains the copyright in all intellectual property, including designs and/or documents prepared in terms of this appointment for the project covered by the appointment. The client may use the designs and/or documents for the sole purpose of their intended use on this project only subject to payment for the design having been received. Use for any other purpose, whether or not the design and/or documents have been paid for constitutes an infringement of copyright, and all rights are reserved.

All dimensions must be verified on site before the works commence. Refer any discrepancies to the Engineer.

Copyright reserved

REVISIONS

NO.	DATE	CHECKED	DONE BY	DESCRIPTION
A	07/09/15	TS	NR	ISSUED FOR INTERNAL REVIEW
B	10/09/15	TS	NR	ISSUED FOR DETAIL DESIGN
C	10/09/15	TS	NR	ISSUED FOR SQUAD CHECK
D	28/09/15	TS	NR	ISSUED FOR CLIENT REVIEW
E	17/11/15	TS	NR	ISSUED FOR CLIENT APPROVAL
0	03/12/15	TS	NR	ISSUED FOR CONSTRUCTION

WorleyParsons
resources & energy
39 MELROSE BOULEVARD, MELROSE ARCH, JOHANNESBURG
P.O. Box 61232, MARSHALLTOWN, 2107
TEL: +27 (0)11 218 3000
FAX: +27(0)11 218 3100
www.worleyparsons.com
WorleyParsons RSA (Pty) Ltd.

	NAME	SIGNATURE	DATE
DRAWN BY:	N ROBINSON		03/12/15
CHECKED :	T SNYDERS		03/12/15
DESIGNER :	T SNYDERS		03/12/15
PR ENG :	I ROBINSON		03/12/15
PROJECT ENG MANAGER	L PADAYACHEE		03/12/15
LOCAL PR ENG :			
CLIENT:			

CLIENT

MOZAMBIQUE GAS DEVELOPMENT PROJECT

Anadarko Moçambique Área 1, Lda

PROJECT
AMA 1 RESETTLEMENT VILLAGE

DRAWING DESCRIPTION
PRIMARY SCHOOL ADMINISTRATION BLOCK REINFORCEMENT

SCALE	DATE
AS SHOWN (ORIGINAL DWG SIZE A1)	DEC 2015

DRAWING NUMBER	REV NO
C00290-00-ST-DAL-0001-001	0

ANADARKO DRAWING NUMBER
EA-MZ-CI0100-WOR-E05-00616-01

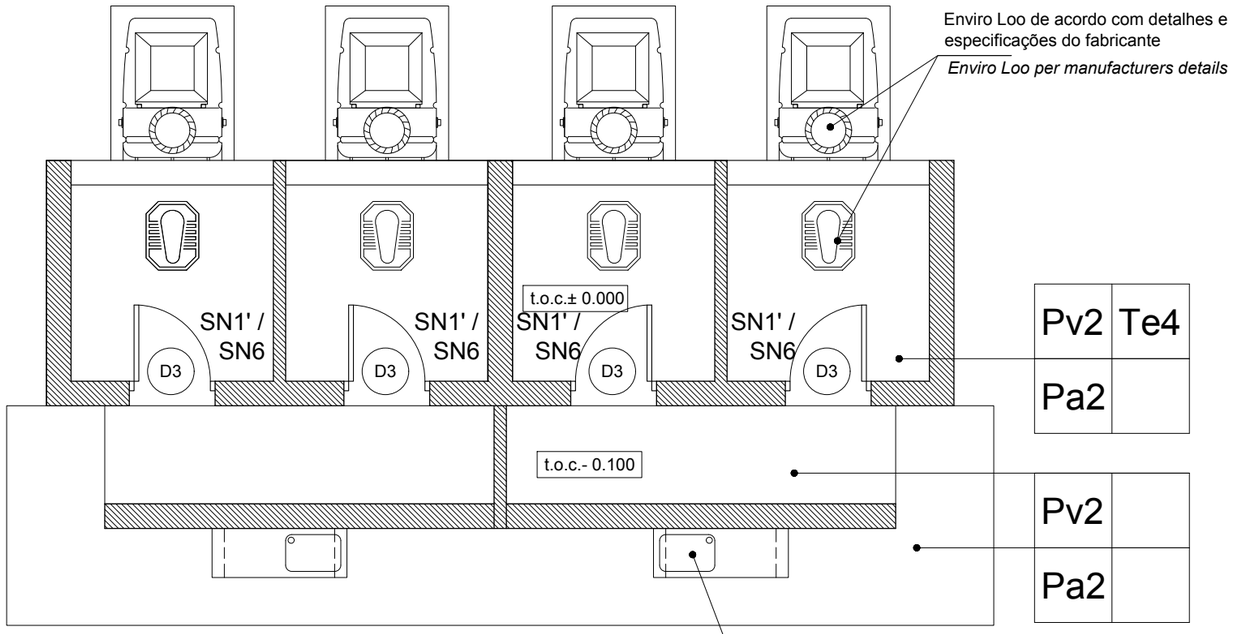

PLANTA DE ACABAMENTOS E VÃOS
Finishing, Doors & Windows Plan

ESCALA/Scale 1:50

ACABAMENTOS / *Finishings*

PAVIMENTOS / *Pavements*

Pv2 -Acabamento do pavimento em cimento queimado
Concrete floor to have power float finish

TECTOS / *Ceilings*

Te4 - Chapa metálica IBR com estrutura de madeira tratada a vista
IBR metalic sheets with visible wooden treated structure

COBERTURA / *Roofs*

Co1 -Chapas metálicas esmaltadas com perfil IBR
Metallic enameled sheets with IBR profile

PAREDES / *Walls*

Pa2 - Pintura com tinta esmalte de cor até 1.50m de altura (lambril) e tinta plástica sobre reboco liso até o tecto
Colour enamel paint until 1.50m height wainscoting PVA paint on plain plaster to ceiling height

SANITÁRIOS / *Sanitary*

SN1` - Porta rolos em porcelana
Toilet rolls holder in porcelain
SN5 - Conjunto de sanita turca em porcelana, modelo "VAAL ORIENTAL SQUAT PAN code 502300" ou similar
Squat pan in pocelain, model "VAAL ORIENTAL SQUAT PAN code 502300 or similar
SN6 - Sistema de latrina tipo "ENVIRO LOO" de acordo com especificações do fabricante
"ENVIRO LOO" system acording to manufactorers details

PINTURA / *Painting*

- Para especificações da pintura consultar documento em anexo.
- For all painting specifications refer to document in annex.
EA-MZ-CI0000-WOR-E04-00031-01

ESTE DESENHO É PARA SER LIDO EM CONJUNTO COM:

THIS DRAWING IS TO BE READ IN CONJUCTION WITH:

ARCHITECTURAL
EA-MZ-CI0100-WOR-E04-00505-01
EA-MZ-CI0100-WOR-E05-01605-01
EA-MZ-CI0100-WOR-E05-00606-01
EA-MZ-CI0100-WOR-E05-00609-01
EA-MZ-CI0100-WOR-E05-00610-01

STRUCTURAL
EA-MZ-CI0100-WOR-E05-00055-01

WATER
EA-MZ-CI0100-WOR-E05-00117-01
EA-MZ-CI0100-WOR-E05-01295-01
EA-MZ-CI0100-WOR-E05-01295-02
EA-MZ-CI0100-WOR-E05-01295-03

ISSUED FOR CONSTRUCTION

WorleyParsons RSA retains the copyright in all intellectual property, including designs and/or documents prepared in terms of this appointment for the project covered by the appointment. The client may use the designs and/or documents for the sole purpose of their intended use on this project only subject to payment for the design having been received. Use for any other purpose, whether or not the design and/or documents have been paid for constitutes an infringement of copyright, and all rights are reserved.

All dimensions must be verified on site before the works commence. Refer any discrepancies to the Engineer.

Copyright reserved

REVISIONS

NO.	DATE	CHK	DONE BY	DESCRIPTION
A	21/07/15	MM	AP	ISSUED INTERNAL REVIEW
B	21/07/15	MM	AP	ISSUED FOR DETAIL DESIGN
C	08/09/15	MM	AP	ISSUED FOR SQUAD CHECK
D	20/10/15	MM	AP	ISSUED FOR CLIENT REVIEW
E	13/11/15	MM	AP	ISSUED CLIENT APPROVAL
0	25/11/15	MM	AP	ISSUED FOR CONSTRUCTION

WorleyParsons
resources & energy
39 MELROSE BOULEVARD, MELROSE ARCH, JOHANNESBURG
P.O. Box 61232, MARSHALLTOWN, 2107
TEL: +27 (0)11 218 3000
FAX: +27(0)11 218 3100
www.worleyparsons.com
WorleyParsons RSA (Pty) Ltd.

MESCH arquitectos

CLIENT

MOZAMBIQUE GAS DEVELOPMENT PROJECT

Anadarko Moçambique Área 1, Lda

PROJECT
AMA 1
RESETTLEMENT
VILLAGE

DRAWING DESCRIPTION
ESC. PRIM. BLOCO SANITÁRIO 2 - PLANTA DE ACABAM. E VÃOS
PRIM. SCHOOL ENVIRO LOO TOILET BLOCK - FINISHING AND W/D KEY PLAN

SCALE	DATE
A3@ 1:50	NOV 2015

DRAWING NUMBER:	REV Nº
C00290-00-AR-DRD-0013-001	0

ANADARKO DRAWING NUMBER:
EA-MZ-CI0100-WOR-E05-00610-01

DOOR SCHEDULE/ Mapa de vãos: Portas

ALL DIMENSIONS AND LEVELS ARE TO BE CHECKED/VERIFIED ON SITE AND ANY DISCREPENCIES ARE TO BE REPORTED TO THE ARCHITECT
TODAS DIMENSÕES E NÍVEIS DEVEM SER VERIFICADOS NA OBRA E QUALQUER DISCREPÂNCIA DEVERÁ SER COMUNICADA AO ARQUITECTO

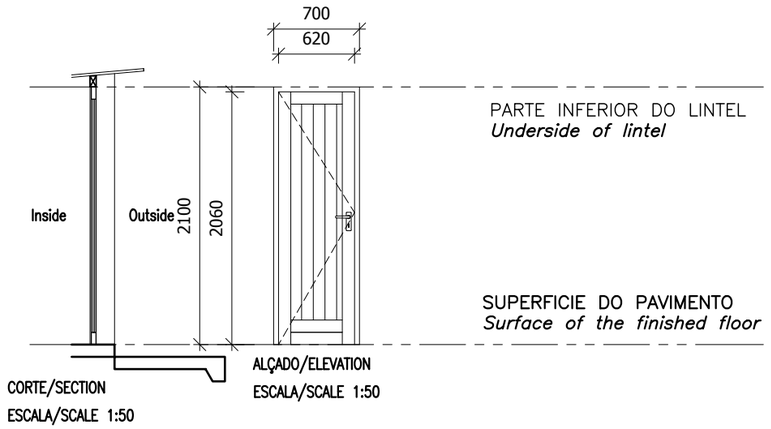

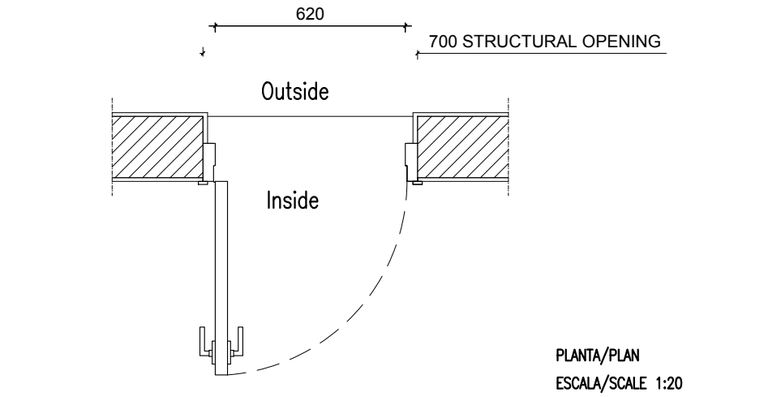

Code: Codigo:	D3	**Position:** Localização:	Toilet Shower	**Qty:** Qtd: 4
Frame: Aro:	WOOD FRAME TO MANUFACTURERS SPECS SEMI SOLID SLATTED TIMBER DOOR DOORS TO BE TYPE PD60 - from SWARTLAND OR SIMILAR			
Finish: Acabamentos:	1 COAT PRIMER 1 COAT UNDERCOAT AND 2 COATS PLASCON ENAMEL DOORS & TRIMS COLOUR "LIGHT BROWN" OR EQUAL & APPROVED			
Ironmongery Ferragens	102 x 75 x 3mm PVD DOUBLE BALL BEARING BUTT HINGE X 3 PER DOOR LOCK (3 LEAVER) WITH HANDLES POLISHED CHROME FINISH SIMILAR TO "UNION" PROTEA CB612 HANDLE			
Glazing: Vidros:				
Glazing Notes:				

NOTES:

1. ALL DOORS WILL BE OF UMBILA OR OF EQUIVALENT WOOD QUALITY & APPROVED BY CLIENT
2. ALL OF THE CASEMENT WINDOWS WILL ALSO TAKE ONE MORE CASEMENT LEAF INSIDE IN MOSQUITO NET
3. ALL OPENINGS SIZE TO BE CONFIRMED ON SITE BEFORE MANUFACTURING
4. SHOP DRAWINGS TO BE APPROVED BY ARCHITECT BEFORE MANUFACTURING
5. REFER TO WINDOW & DOOR SCHEDULE KEY PLAN

ESTE DESENHO É PARA SER LIDO EM CONJUNTO COM:

THIS DRAWING IS TO BE READ IN CONJUCTION WITH:

ARCHITECTURAL
EA-MZ-CI0100-WOR-E04-00505-01
EA-MZ-CI0100-WOR-E05-01605-01
EA-MZ-CI0100-WOR-E05-00606-01
EA-MZ-CI0100-WOR-E05-00609-01
EA-MZ-CI0100-WOR-E05-00610-01

ISSUED FOR CONSTRUCTION

WorleyParsons RSA retains the copyright in all intellectual property, including designs and/or documents prepared in terms of this appointment for the project covered by the appointment. The client may use the designs and/or documents for the sole purpose of their intended use on this project only subject to payment for the design having been received. Use for any other purpose, whether or not the design and/or documents have been paid for constitutes an infringement of copyright, and all rights are reserved.

All dimensions must be verified on site before the works commence. Refer any discrepancies to the Engineer.

Copyright reserved

REVISIONS

NO.	DATE	CHK	DONE BY	DESCRIPTION
A	21/07/15	MM	AP	ISSUED INTERNAL REVIEW
B	21/07/15	MM	AP	ISSUED FOR DETAIL DESIGN
C	08/09/15	MM	AP	ISSUED FOR SQUAD CHECK
D	20/10/15	MM	AP	ISSUED FOR CLIENT REVIEW
E	13/11/15	MM	AP	ISSUED CLIENT APPROVAL
0	25/11/15	MM	AP	ISSUED FOR CONSTRUCTION

WorleyParsons
resources & energy
39 MELROSE BOULEVARD, MELROSE ARCH, JOHANNESBURG
P.O. Box 61232, MARSHALLTOWN, 2107
TEL: +27 (0)11 218 3000
FAX: +27(0)11 218 3100
www.worleyparsons.com
WorleyParsons RSA (Pty) Ltd.

MESCH arquitectos

CLIENT

MOZAMBIQUE GAS DEVELOPMENT PROJECT

Anadarko Moçambique Área 1, Lda

PROJECT
AMA 1
RESETTLEMENT
VILLAGE

DRAWING DESCRIPTION
ESCOLA PRIMÁRIA BLOCO SANITÁRIO 2 - MAPA DE VÃOS
PRIMARY SCHOOL ENVIRO LOO TOILET BLOCK - DOOR SCHEDULE

SCALE	DATE
A3@ 1:50	NOV 2015

DRAWING NUMBER:	REV Nº
C00290-00-AR-SCH-0013	0

ANADARKO DRAWING NUMBER:
EA-MZ-CI0100-WOR-E05-00609-01

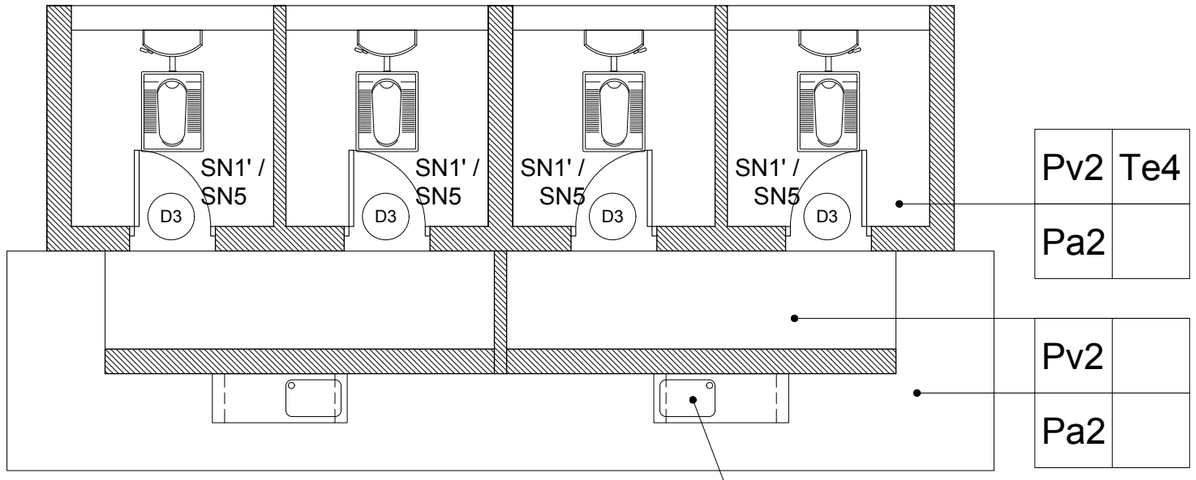

PLANTA DE ACABAMENTOS E VÃOS
Finishing, Doors & Windows Plan

ESCALA/Scale 1:50

ESTE DESENHO É PARA SER LIDO EM CONJUNTO COM:

THIS DRAWING IS TO BE READ IN CONJUCTION WITH:

ARCHITECTURAL
EA-MZ-CI0100-WOR-E04-00505-01
EA-MZ-CI0100-WOR-E05-00603-01
EA-MZ-CI0100-WOR-E05-01604-01
EA-MZ-CI0100-WOR-E05-00607-01
EA-MZ-CI0100-WOR-E05-00608-01

STRUCTURAL
EA-MZ-CI0100-WOR-E05-00054-01

WATER
EA-MZ-CI0100-WOR-E05-00117-01
EA-MZ-CI0100-WOR-E05-00117-01
EA-MZ-CI0100-WOR-E05-01295-01
EA-MZ-CI0100-WOR-E05-01295-02
EA-MZ-CI0100-WOR-E05-01295-03

ACABAMENTOS / *Finishings*

PAVIMENTOS / *Pavements*

Pv2 -Acabamento do pavimento em cimento queimado
Concrete floor to have power float finish

TECTOS / *Ceilings*

Te4 - Chapa metálica IBR com estrutura de madeira tratada a vista
IBR metalic sheets with visible wooden treated structure

COBERTURA / *Roofs*

Co1 -Chapas metálicas esmaltadas com perfil IBR
Metallic enameled sheets with IBR profile

PAREDES / *Walls*

Pa2 - Pintura com tinta esmalte de cor até 1.50m de altura (lambril) e tinta plástica sobre reboco liso até o tecto
Colour enamel paint until 1.50m height wainscoting PVA paint on plain plaster to ceiling height

SANITÁRIOS / *Sanitary*

SN1` - Porta rolos em porcelana
Toilet rolls holder in porcelain
SN5 - Conjunto de sanita turca em porcelana, modelo "VAAL ORIENTAL SQUAT PAN code 502300" ou similar
Squat pan in pocelain, model "VAAL ORIENTAL SQUAT PAN code 502300 or similar
SN6 - Sistema de latrina tipo "ENVIRO LOO" de acordo com especificações do fabricante
"ENVIRO LOO" system acording to manufactorers details

PINTURA / *Painting*

- Para especificações da pintura consultar documento em anexo.
- For all painting specifications refer to document in annex.
EA-MZ-CI0000-WOR-E04-00031-01

ISSUED FOR CONSTRUCTION

WorleyParsons RSA retains the copyright in all intellectual property, including designs and/or documents prepared in terms of this appointment for the project covered by the appointment. The client may use the designs and/or documents for the sole purpose of their intended use on this project only subject to payment for the design having been received. Use for any other purpose, whether or not the design and/or documents have been paid for constitutes an infringement of copyright, and all rights are reserved.

All dimensions must be verified on site before the works commence. Refer any discrepancies to the Engineer.

Copyright reserved

REVISIONS

NO.	DATE	CHK	DONE BY	DESCRIPTION
A	21/07/15	MM	AP	ISSUED INTERNAL REVIEW
B	21/07/15	MM	AP	ISSUED FOR DETAIL DESIGN
C	08/09/15	MM	AP	ISSUED FOR SQUAD CHECK
D	20/10/15	MM	AP	ISSUED FOR CLIENT REVIEW
E	13/11/15	MM	AP	ISSUED CLIENT APPROVAL
0	25/11/15	MM	AP	ISSUED FOR CONSTRUCTION

WorleyParsons
resources & energy
39 MELROSE BOULEVARD, MELROSE ARCH, JOHANNESBURG
P.O. Box 61232, MARSHALLTOWN, 2107
TEL: +27 (0)11 218 3000
FAX: +27(0)11 218 3100
www.worleyparsons.com
WorleyParsons RSA (Pty) Ltd.

MESCH arquitectos

CLIENT

MOZAMBIQUE GAS DEVELOPMENT PROJECT

Anadarko Moçambique Área 1, Lda

PROJECT
AMA 1
RESETTLEMENT
VILLAGE

DRAWING DESCRIPTION
ESC. PRIM. BLOCO SANITÁRIO 1 - PLANTA DE ACABAM. E VÃOS
PRIM. SCHOOL FLUSHING TOILET BLOCK - FINISHING & W/D KEY PLAN

SCALE	DATE
A3@ 1:50	NOV 2015

DRAWING NUMBER:	REV Nº
C00290-00-AR-DRD-0012-001	0

ANADARKO DRAWING NUMBER:
EA-MZ-CI0100-WOR-E05-00608-01

DOOR SCHEDULE/ Mapa de vãos: Portas

ALL DIMENSIONS AND LEVELS ARE TO BE CHECKED/VERIFIED ON SITE AND ANY DISCREPENCIES ARE TO BE REPORTED TO THE ARCHITECT
TODAS DIMENSÕES E NÍVEIS DEVEM SER VERIFICADOS NA OBRA E QUALQUER DISCREPÂNCIA DEVERÁ SER COMUNICADA AO ARQUITECTO

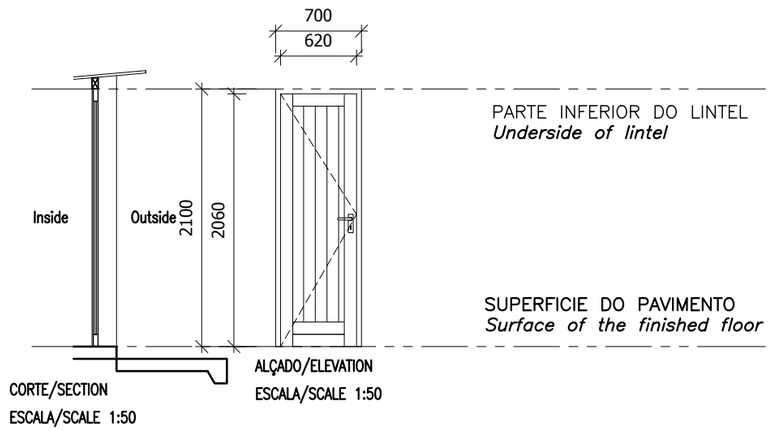

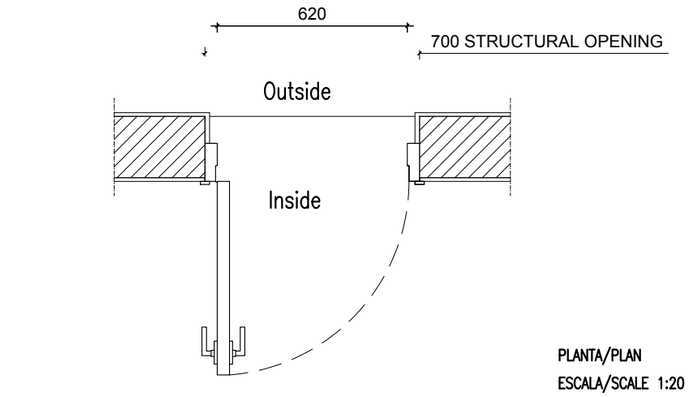

Code: Codigo:	D3	**Position:** Localização:	Toilet Shower	**Qty:** Qtd: 4
Frame: Aro:	WOOD FRAME TO MANUFACTURERS SPECS SEMI SOLID SLATTED TIMBER DOOR DOORS TO BE TYPE PD60 - from SWARTLAND OR SIMILAR			
Finish: Acabamentos:	1 COAT PRIMER 1 COAT UNDERCOAT AND 2 COATS PLASCON ENAMEL DOORS & TRIMS COLOUR "LIGHT BROWN" OR EQUAL & APPROVED			
Ironmongery Ferragens	102 x 75 x 3mm PVD DOUBLE BALL BEARING BUTT HINGE X 3 PER DOOR LOCK (3 LEAVER) WITH HANDLES POLISHED CHROME FINISH SIMILAR TO "UNION" PROTEA CB612 HANDLE			
Glazing: Vidros:				
Glazing Notes:				

NOTES:

1. ALL DOORS WILL BE OF UMBILA OR OF EQUIVALENT WOOD QUALITY & APPROVED BY CLIENT
2. ALL OF THE CASEMENT WINDOWS WILL ALSO TAKE ONE MORE CASEMENT LEAF INSIDE IN MOSQUITO NET
3. ALL OPENINGS SIZE TO BE CONFIRMED ON SITE BEFORE MANUFACTURING
4. SHOP DRAWINGS TO BE APPROVED BY ARCHITECT BEFORE MANUFACTURING
5. REFER TO WINDOW & DOOR SCHEDULE KEY PLAN

ESTE DESENHO É PARA SER LIDO EM CONJUNTO COM:

THIS DRAWING IS TO BE READ IN CONJUCTION WITH:

ARCHITECTURAL
EA-MZ-CI0100-WOR-E04-00505-01
EA-MZ-CI0100-WOR-E05-00603-01
EA-MZ-CI0100-WOR-E05-01604-01
EA-MZ-CI0100-WOR-E05-00607-01
EA-MZ-CI0100-WOR-E05-00608-01

STRUCTURAL
EA-MZ-CI0100-WOR-E05-00054-01

ISSUED FOR CONSTRUCTION

WorleyParsons RSA retains the copyright in all intellectual property, including designs and/or documents prepared in terms of this appointment for the project covered by the appointment. The client may use the designs and/or documents for the sole purpose of their intended use on this project only subject to payment for the design having been received. Use for any other purpose, whether or not the design and/or documents have been paid for constitutes an infringement of copyright, and all rights are reserved.

All dimensions must be verified on site before the works commence. Refer any discrepancies to the Engineer.

Copyright reserved

REVISIONS

NO.	DATE	CHK	DONE BY	DESCRIPTION
A	21/07/15	MM	AP	ISSUED INTERNAL REVIEW
B	21/07/15	MM	AP	ISSUED FOR DETAIL DESIGN
C	08/09/15	MM	AP	ISSUED FOR SQUAD CHECK
D	20/10/15	MM	AP	ISSUED FOR CLIENT REVIEW
E	13/11/15	MM	AP	ISSUED CLIENT APPROVAL
0	25/11/15	MM	AP	ISSUED FOR CONSTRUCTION

WorleyParsons
resources & energy
39 MELROSE BOULEVARD, MELROSE ARCH, JOHANNESBURG
P.O. Box 61232, MARSHALLTOWN, 2107
TEL: +27 (0)11 218 3000
FAX: +27(0)11 218 3100
www.worleyparsons.com
WorleyParsons RSA (Pty) Ltd.

MESCH arquitectos

CLIENT

MOZAMBIQUE GAS DEVELOPMENT PROJECT

Anadarko Moçambique Área 1, Lda

PROJECT
AMA 1
RESETTLEMENT
VILLAGE

DRAWING DESCRIPTION
ESCOLA PRIMÁRIA BLOCO SANITÁRIO 1 - MAPA DE VÃOS
PRIMARY SCHOOL FLUSHING TOILET BLOCK - DOOR SCHEDULE

SCALE	DATE
A3@ 1:50	NOV 2015

DRAWING NUMBER:	REV Nº
C00290-00-AR-SCH-0012	0

ANADARKO DRAWING NUMBER:
EA-MZ-CI0100-WOR-E05-00607-01

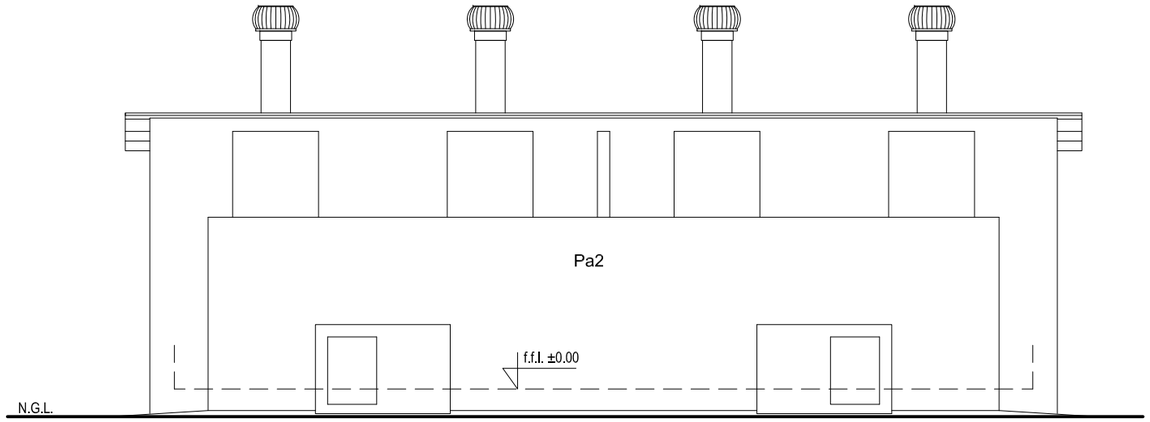

ALÇADO FRONTAL
Front Elevation

ESCALA/Scale 1:50

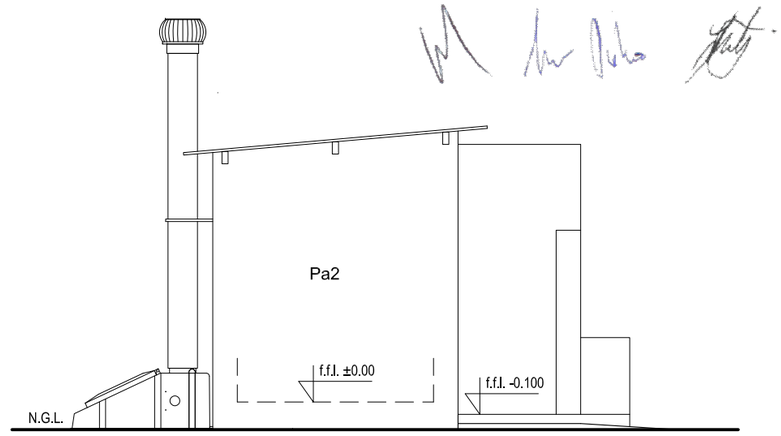

ALÇADO LATERAL
Side Elevation

ESCALA/Scale 1:50

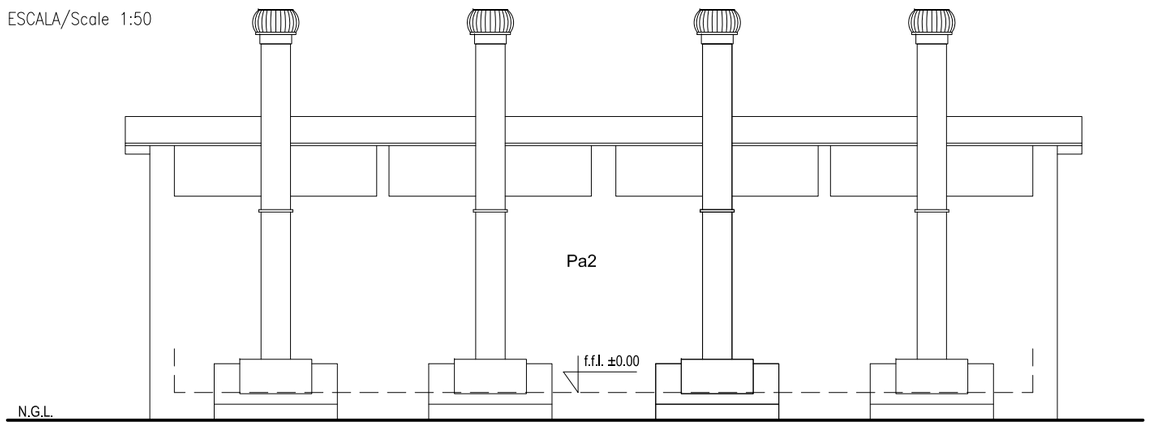

ALÇADO POSTERIOR
Back Side Elevation

ESCALA/Scale 1:50

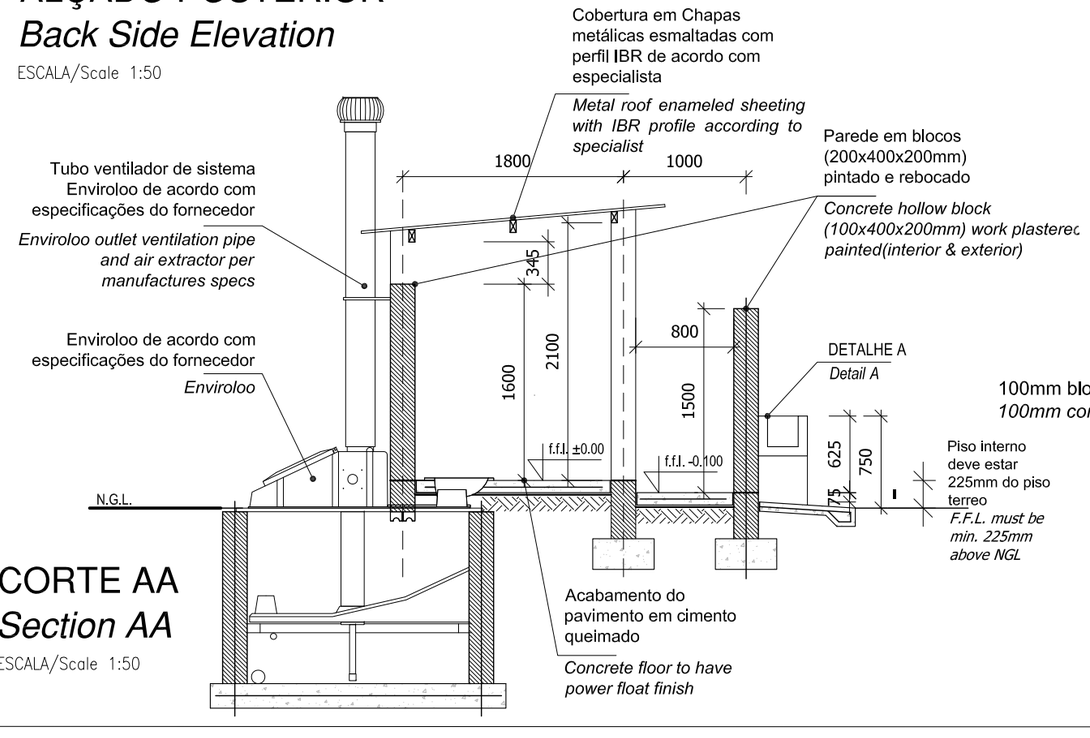

CORTE AA
Section AA

ESCALA/Scale 1:50

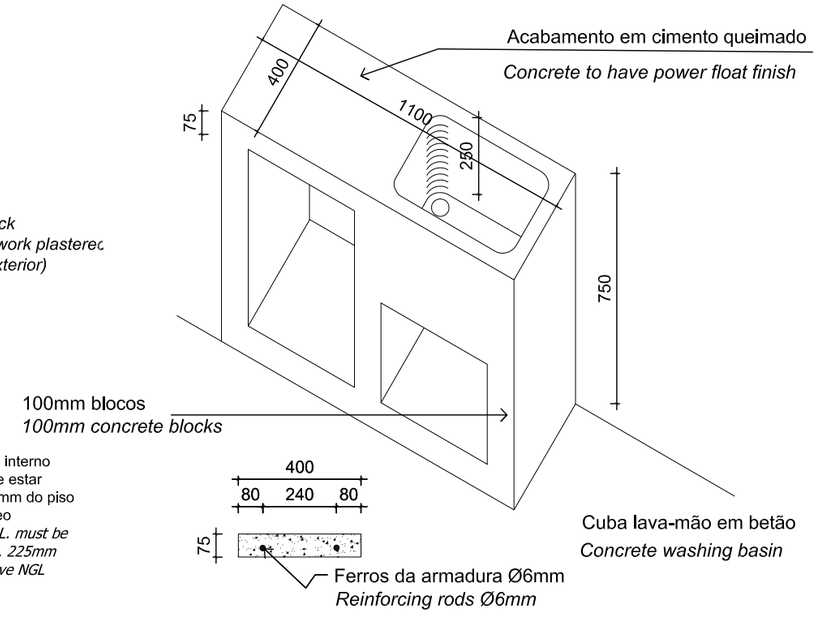

DETALHE A
Detali A

ESCALA/Scale 1:20

ESTE DESENHO É PARA SER LIDO EM CONJUNTO COM:

THIS DRAWING IS TO BE READ IN CONJUCTION WITH:

ARCHITECTURAL
EA-MZ-CI0100-WOR-E04-00505-01
EA-MZ-CI0100-WOR-E05-01605-01
EA-MZ-CI0100-WOR-E05-00606-01
EA-MZ-CI0100-WOR-E05-00609-01
EA-MZ-CI0100-WOR-E05-00610-01

STRUCTURAL
EA-MZ-CI0100-WOR-E05-00055-01

WATER
EA-MZ-CI0100-WOR-E05-00117-01
EA-MZ-CI0100-WOR-E05-01295-01
EA-MZ-CI0100-WOR-E05-01295-02
EA-MZ-CI0100-WOR-E05-01295-03

ISSUED FOR CONSTRUCTION

WorleyParsons RSA retains the copyright in all intellectual property, including designs and/or documents prepared in terms of this appointment for the project covered by the appointment. The client may use the designs and/or documents for the sole purpose of their intended use on this project only subject to payment for the design having been received. Use for any other purpose, whether or not the design and/or documents have been paid for constitutes an infringement of copyright, and all rights are reserved.

All dimensions must be verified on site before the works commence. Refer any discrepancies to the Engineer.

Copyright reserved

REVISIONS

NO.	DATE	CHK	DONE BY	DESCRIPTION
A	21/07/15	MM	AP	ISSUED INTERNAL REVIEW
B	21/07/15	MM	AP	ISSUED FOR DETAIL DESIGN
C	08/09/15	MM	AP	ISSUED FOR SQUAD CHECK
D	20/10/15	MM	AP	ISSUED FOR CLIENT REVIEW
E	13/11/15	MM	AP	ISSUED CLIENT APPROVAL
0	25/11/15	MM	AP	ISSUED FOR CONSTRUCTION

WorleyParsons
resources & energy
39 MELROSE BOULEVARD, MELROSE ARCH, JOHANNESBURG
P.O. Box 61232, MARSHALLTOWN, 2107
TEL: +27 (0)11 218 3000
FAX: +27(0)11 218 3100
www.worleyparsons.com
WorleyParsons RSA (Pty) Ltd.

MESCH arquitectos

CLIENT

MOZAMBIQUE GAS DEVELOPMENT PROJECT

Anadarko Moçambique Área 1, Lda

PROJECT
AMA 1
RESETTLEMENT
VILLAGE

DRAWING DESCRIPTION
ESCOLA PRIMÁRIA BLOCO SANITÁRIO 2 - ALÇADOS & CORTE
PRIMARY SCHOOL ENVIRO LOO TOILET BLOCK - ELEVATIONS & SECTION

SCALE	DATE
A3@ 1:50	NOV 2015

DRAWING NUMBER:	REV Nº
C00290-00-AR-DEL-0028-001	0

ANADARKO DRAWING NUMBER:
EA-MZ-CI0100-WOR-E05-00606-01

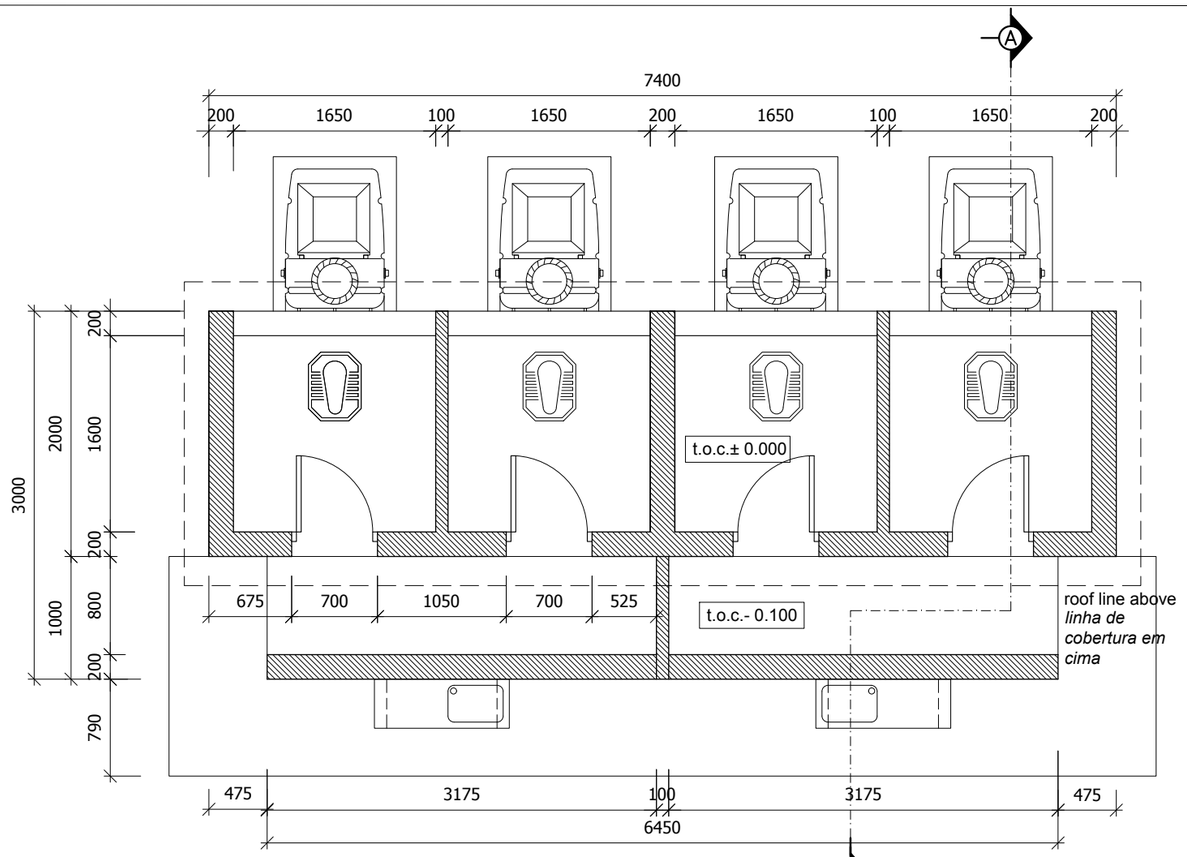

PLANTA
Floor Plan

ESCALA/Scale 1:50

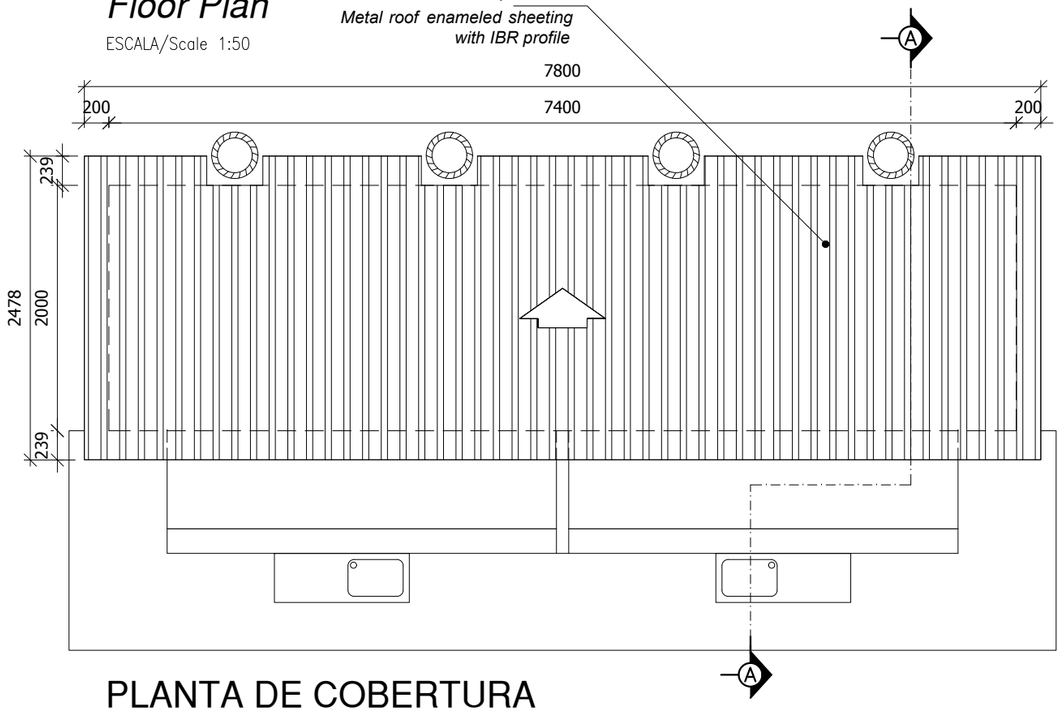

PLANTA DE COBERTURA
Roof Plan

ESCALA/Scale 1:50

ESTE DESENHO É PARA SER LIDO EM CONJUNTO COM:

THIS DRAWING IS TO BE READ IN CONJUCTION WITH:

ARCHITECTURAL
EA-MZ-CI0100-WOR-E04-00505-01
EA-MZ-CI0100-WOR-E05-01605-01
EA-MZ-CI0100-WOR-E05-00606-01
EA-MZ-CI0100-WOR-E05-00609-01
EA-MZ-CI0100-WOR-E05-00610-01

STRUCTURAL
EA-MZ-CI0100-WOR-E05-00055-01

WATER
EA-MZ-CI0100-WOR-E05-00117-01
EA-MZ-CI0100-WOR-E05-01295-01
EA-MZ-CI0100-WOR-E05-01295-02
EA-MZ-CI0100-WOR-E05-01295-03

ISSUED FOR CONSTRUCTION

WorleyParsons RSA retains the copyright in all intellectual property, including designs and/or documents prepared in terms of this appointment for the project covered by the appointment. The client may use the designs and/or documents for the sole purpose of their intended use on this project only subject to payment for the design having been received. Use for any other purpose, whether or not the design and/or documents have been paid for constitutes an infringement of copyright, and all rights are reserved.

All dimensions must be verified on site before the works commence. Refer any discrepancies to the Engineer.

Copyright reserved

REVISIONS

NO.	DATE	CHK	DONE BY	DESCRIPTION
A	21/07/15	MM	AP	ISSUED INTERNAL REVIEW
B	21/07/15	MM	AP	ISSUED FOR DETAIL DESIGN
C	08/09/15	MM	AP	ISSUED FOR SQUAD CHECK
D	20/10/15	MM	AP	ISSUED FOR CLIENT REVIEW
E	13/11/15	MM	AP	ISSUED CLIENT APPROVAL
0	25/11/15	MM	AP	ISSUED FOR CONSTRUCTION

WorleyParsons
resources & energy
39 MELROSE BOULEVARD, MELROSE ARCH, JOHANNESBURG
P.O. Box 61232, MARSHALLTOWN, 2107
TEL: +27 (0)11 218 3000
FAX: +27(0)11 218 3100
www.worleyparsons.com
WorleyParsons RSA (Pty) Ltd.

MESCH arquitectos

CLIENT

MOZAMBIQUE GAS DEVELOPMENT PROJECT

Anadarko Moçambique Área 1, Lda

PROJECT
AMA 1
RESETTLEMENT
VILLAGE

DRAWING DESCRIPTION
ESCOLA PRIM. BLOCO SANITÁRIO 2- PLANTA DE PISO/COBERTURA
PRI. SCHOOL ENVIRO LOO TOILET BLOCK - FLOOR & ROOF PLAN

SCALE	DATE
A3@ 1:50	NOV 2015

DRAWING NUMBER:	REV Nº
C00290-00-AR-DLP-0030-001	0

ANADARKO DRAWING NUMBER:
EA-MZ-CI0100-WOR-E05-00605-01

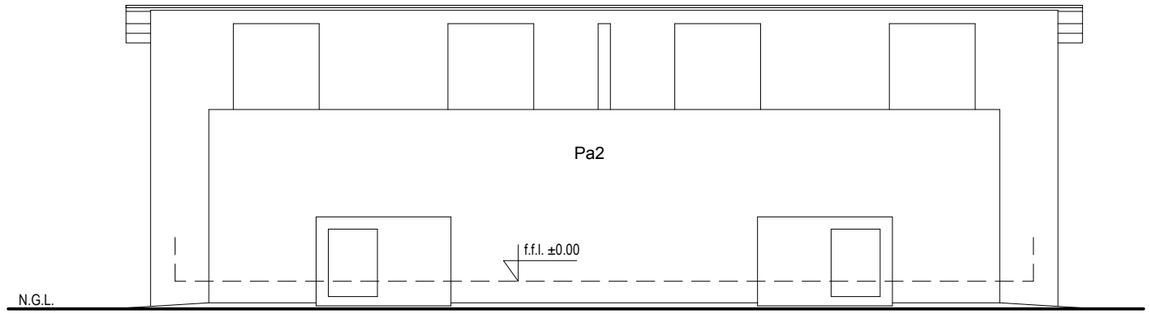

ALÇADO FRONTAL
Front Elevation
ESCALA/Scale 1:50

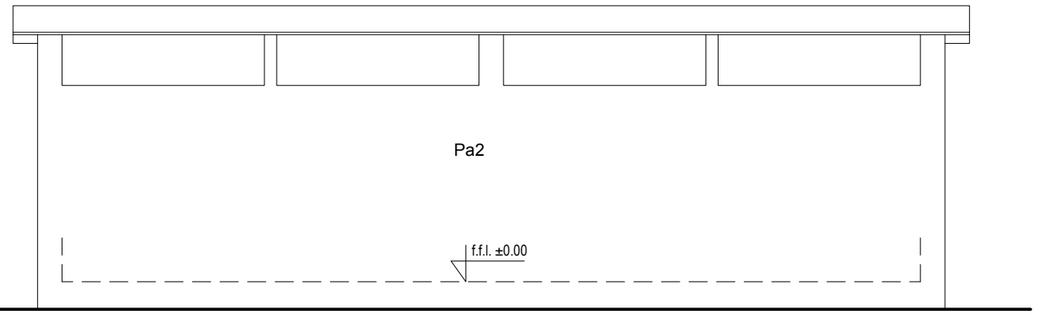

ALÇADO POSTERIOR
Back Side Elevation
ESCALA/Scale 1:50

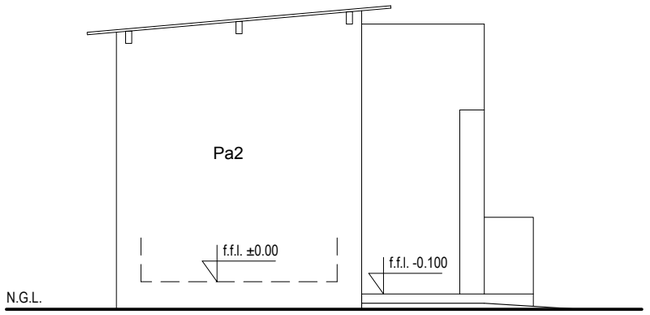

ALÇADO LATERAL
Side Elevation
ESCALA/Scale 1:50

ESTE DESENHO É PARA SER LIDO EM CONJUNTO COM:

THIS DRAWING IS TO BE READ IN CONJUCTION WITH:

ARCHITECTURAL
EA-MZ-CI0100-WOR-E04-00505-01
EA-MZ-CI0100-WOR-E05-00603-01
EA-MZ-CI0100-WOR-E05-01604-01
EA-MZ-CI0100-WOR-E05-00607-01
EA-MZ-CI0100-WOR-E05-00608-01

STRUCTURAL
EA-MZ-CI0100-WOR-E05-00054-01

WATER
EA-MZ-CI0100-WOR-E05-00117-01
EA-MZ-CI0100-WOR-E05-00117-01
EA-MZ-CI0100-WOR-E05-01295-01
EA-MZ-CI0100-WOR-E05-01295-02
EA-MZ-CI0100-WOR-E05-01295-03

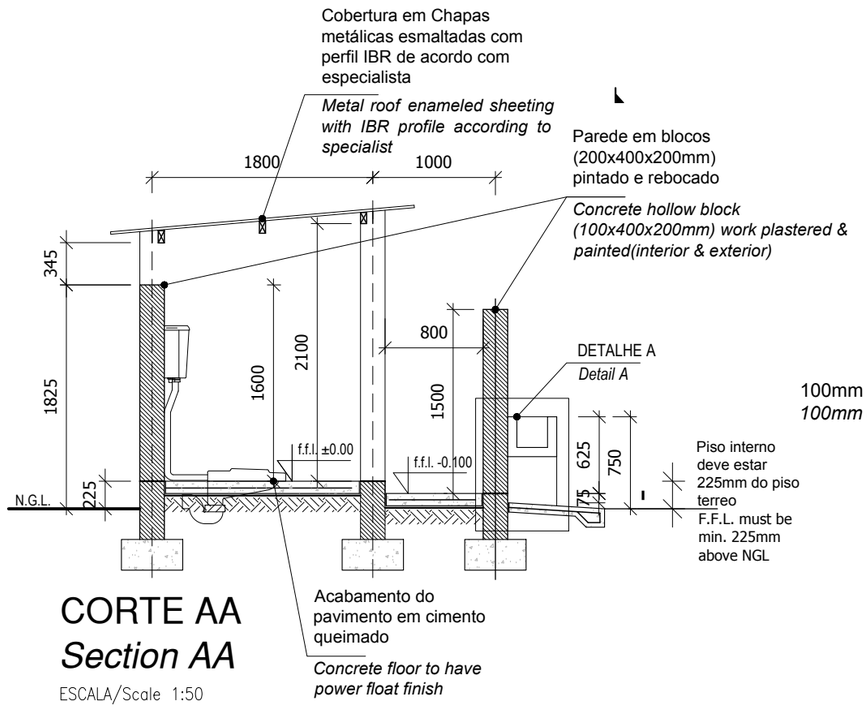

CORTE AA
Section AA
ESCALA/Scale 1:50

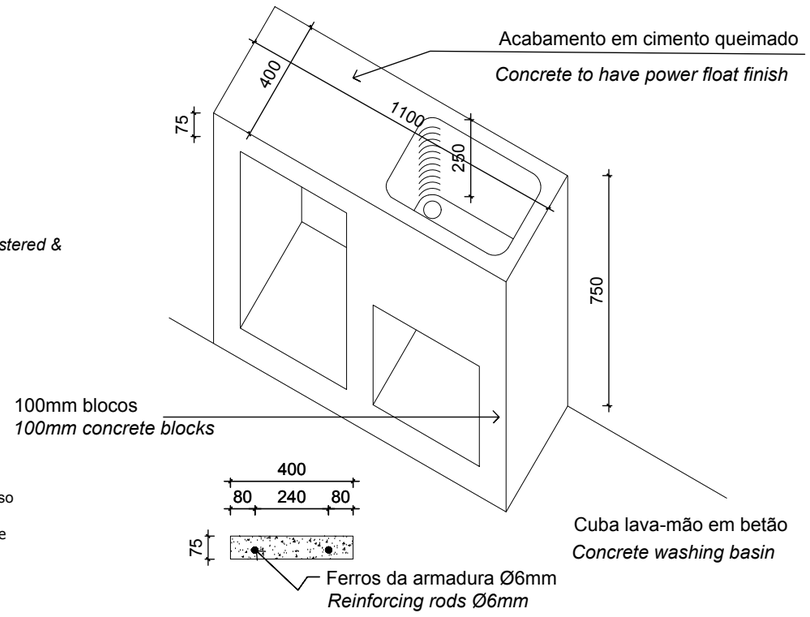

DETALHE A
Detali A
ESCALA/Scale 1:20

ISSUED FOR CONSTRUCTION

WorleyParsons RSA retains the copyright in all intellectual property, including designs and/or documents prepared in terms of this appointment for the project covered by the appointment. The client may use the designs and/or documents for the sole purpose of their intended use on this project only subject to payment for the design having been received. Use for any other purpose, whether or not the design and/or documents have been paid for constitutes an infringement of copyright, and all rights are reserved.

All dimensions must be verified on site before the works commence. Refer any discrepancies to the Engineer.

Copyright reserved

REVISIONS

NO.	DATE	CHK	DONE BY	DESCRIPTION
A	21/07/15	MM	AP	ISSUED INTERNAL REVIEW
B	21/07/15	MM	AP	ISSUED FOR DETAIL DESIGN
C	08/09/15	MM	AP	ISSUED FOR SQUAD CHECK
D	20/10/15	MM	AP	ISSUED FOR CLIENT REVIEW
E	13/11/15	MM	AP	ISSUED CLIENT APPROVAL
0	25/11/15	MM	AP	ISSUED FOR CONSTRUCTION

WorleyParsons
resources & energy
39 MELROSE BOULEVARD, MELROSE ARCH, JOHANNESBURG
P.O. Box 61232, MARSHALLTOWN, 2107
TEL: +27 (0)11 218 3000
FAX: +27(0)11 218 3100
www.worleyparsons.com
WorleyParsons RSA (Pty) Ltd.

MESCH arquitectos

CLIENT

MOZAMBIQUE GAS DEVELOPMENT PROJECT

Anadarko Moçambique Área 1, Lda

PROJECT
AMA 1
RESETTLEMENT
VILLAGE

DRAWING DESCRIPTION
ESCOLA PRIMÁRIA BLOCO SANITÁRIO 1 - ALÇADOS & CORTE
PRIM. SCHOOL FLUSHING TOILET BLOCK - ELEVATIONS & SECTION

SCALE	DATE
A3@ 1:50	NOV 2015

DRAWING NUMBER:	REV Nº
C00290-00-AR-DEL-0027-001	0

ANADARKO DRAWING NUMBER:
EA-MZ-CI0100-WOR-E05-00604-01

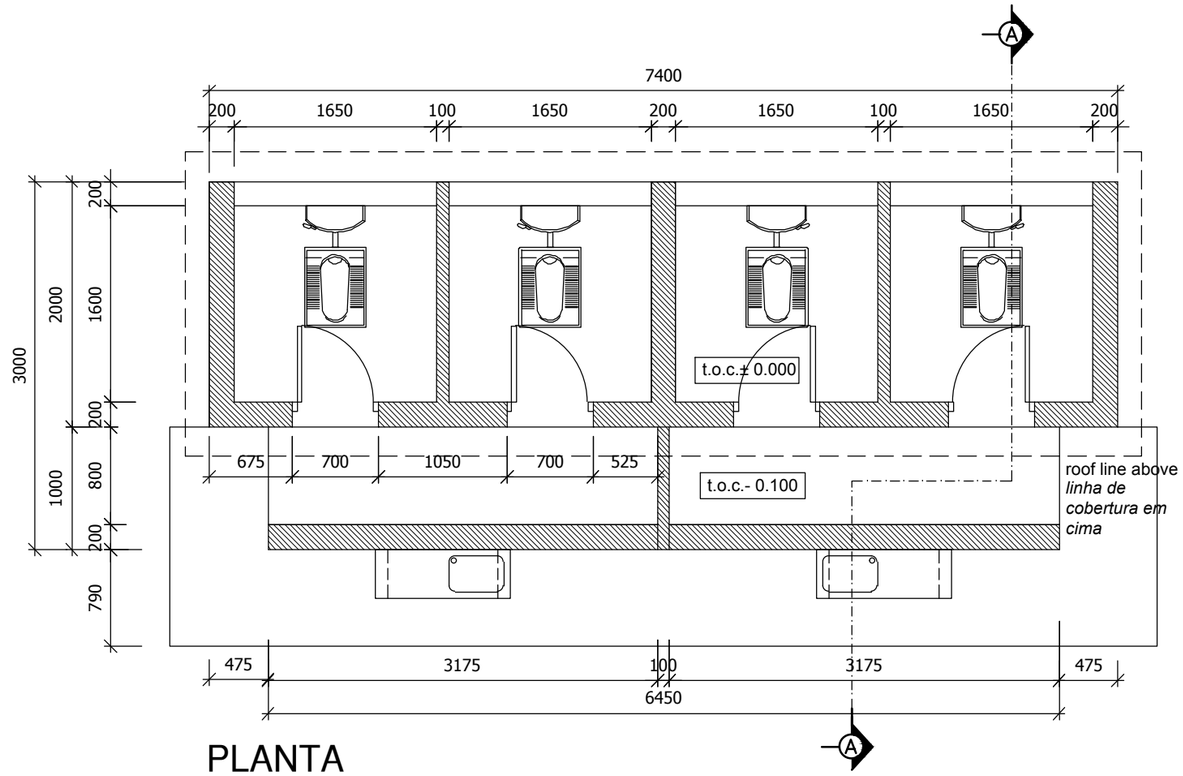

PLANTA
Floor Plan

ESCALA/Scale 1:50

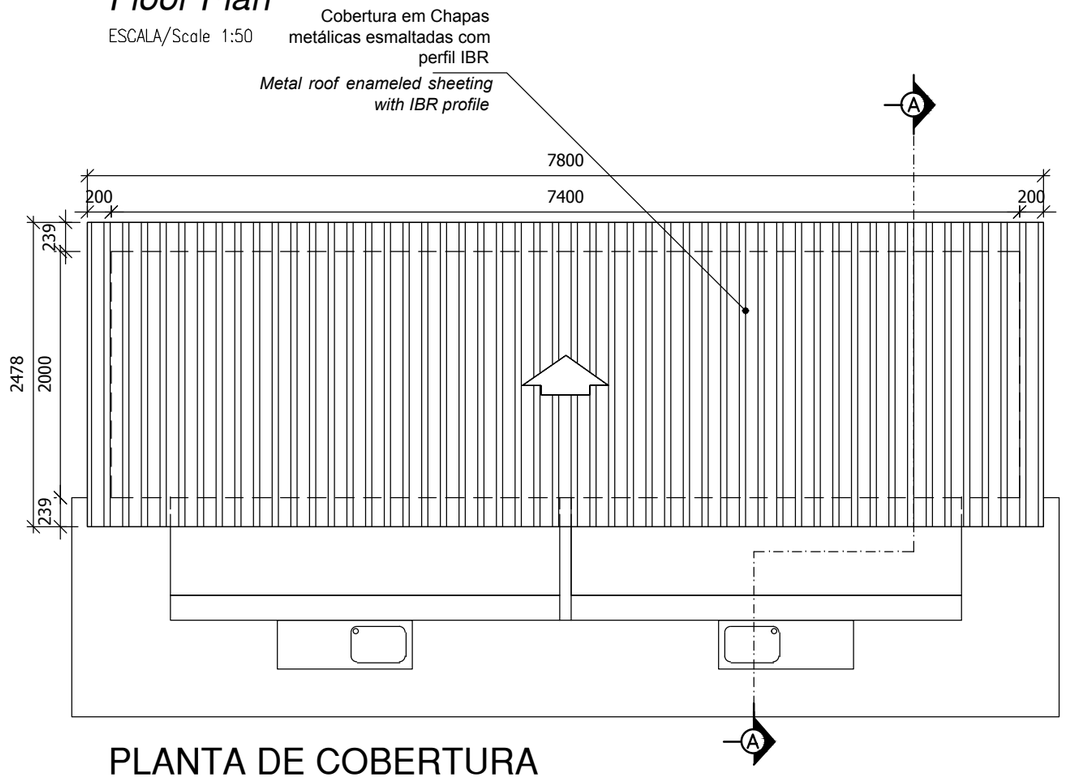

PLANTA DE COBERTURA
Roof Plan

ESCALA/Scale 1:50

ESTE DESENHO É PARA SER LIDO EM CONJUNTO COM:

THIS DRAWING IS TO BE READ IN CONJUCTION WITH:

ARCHITECTURAL
EA-MZ-CI0100-WOR-E04-00505-01
EA-MZ-CI0100-WOR-E05-01604-01
EA-MZ-CI0100-WOR-E05-00607-01
EA-MZ-CI0100-WOR-E05-00608-01

STRUCTURAL
EA-MZ-CI0100-WOR-E05-00054-01

WATER
EA-MZ-CI0100-WOR-E05-00117-01
EA-MZ-CI0100-WOR-E05-00117-01
EA-MZ-CI0100-WOR-E05-01295-01
EA-MZ-CI0100-WOR-E05-01295-02
EA-MZ-CI0100-WOR-E05-01295-03

ISSUED FOR CONSTRUCTION

WorleyParsons RSA retains the copyright in all intellectual property, including designs and/or documents prepared in terms of this appointment for the project covered by the appointment. The client may use the designs and/or documents for the sole purpose of their intended use on this project only subject to payment for the design having been received. Use for any other purpose, whether or not the design and/or documents have been paid for constitutes an infringement of copyright, and all rights are reserved.

All dimensions must be verified on site before the works commence. Refer any discrepancies to the Engineer.

Copyright reserved

REVISIONS

NO.	DATE	CHK	DONE BY	DESCRIPTION
A	21/07/15	MM	AP	ISSUED INTERNAL REVIEW
B	21/07/15	MM	AP	ISSUED FOR DETAIL DESIGN
C	08/09/15	MM	AP	ISSUED FOR SQUAD CHECK
D	20/10/15	MM	AP	ISSUED FOR CLIENT REVIEW
E	13/11/15	MM	AP	ISSUED CLIENT APPROVAL
0	25/11/15	MM	AP	ISSUED FOR CONSTRUCTION

WorleyParsons
resources & energy
39 MELROSE BOULEVARD, MELROSE ARCH, JOHANNESBURG
P.O. Box 61232, MARSHALLTOWN, 2107
TEL: +27 (0)11 218 3000
FAX: +27(0)11 218 3100
www.worleyparsons.com
WorleyParsons RSA (Pty) Ltd.

MESCH arquitectos

CLIENT

MOZAMBIQUE GAS DEVELOPMENT PROJECT

Anadarko Moçambique Área 1, Lda

PROJECT
AMA 1
RESETTLEMENT
VILLAGE

DRAWING DESCRIPTION
ESCOLA PRIM. BLOCO SANITÁRIO 1 - PLANTA DE PISO E COBERTURA
PRI. SCHOOL FLUSHING TOILET BLOCK - FLOOR & ROOF PLAN

SCALE	DATE
A3@ 1:50	NOV 2015

DRAWING NUMBER:	REV Nº
C00290-00-AR-DLP-0029-001	0

ANADARKO DRAWING NUMBER:
EA-MZ-CI0100-WOR-E05-00603-01

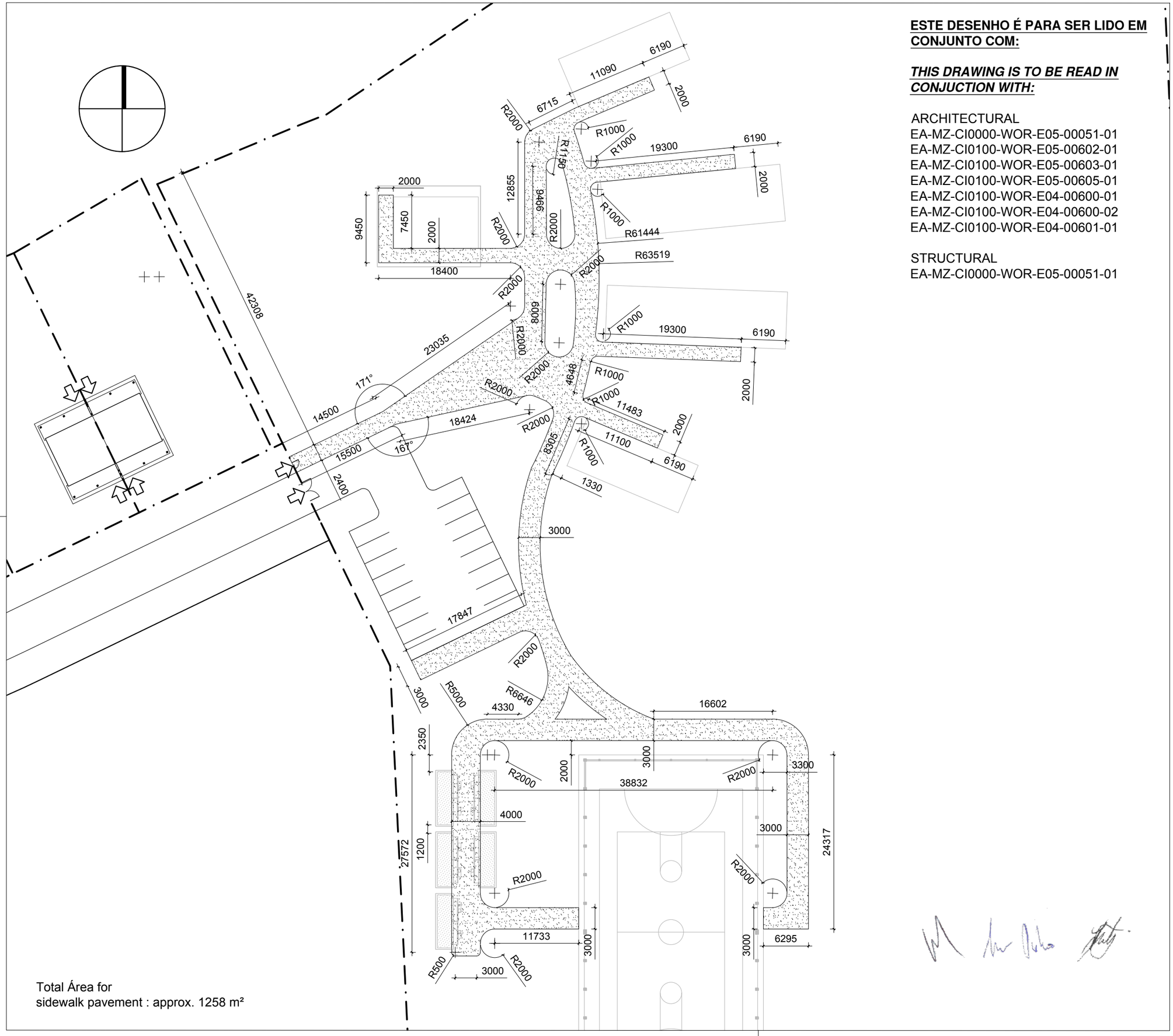

Total Área for
sidewalk pavement : approx. 1258 m²

ESTE DESENHO É PARA SER LIDO EM CONJUNTO COM:

THIS DRAWING IS TO BE READ IN CONJUCTION WITH:

ARCHITECTURAL
EA-MZ-CI0000-WOR-E05-00051-01
EA-MZ-CI0100-WOR-E05-00602-01
EA-MZ-CI0100-WOR-E05-00603-01
EA-MZ-CI0100-WOR-E05-00605-01
EA-MZ-CI0100-WOR-E04-00600-01
EA-MZ-CI0100-WOR-E04-00600-02
EA-MZ-CI0100-WOR-E04-00601-01

STRUCTURAL
EA-MZ-CI0000-WOR-E05-00051-01

ISSUED FOR CONSTRUCTION

WorleyParsons RSA retains the copyright in all intellectual property, including designs and/or documents prepared in terms of this appointment for the project covered by the appointment. The client may use the designs and/or documents for the sole purpose of their intended use on this project only subject to payment for the design having been received. Use for any other purpose, whether or not the design and/or documents have been paid for constitutes an infringement of copyright, and all rights are reserved.

All dimensions must be verified on site before the works commence. Refer any discrepancies to the Engineer.

Copyright reserved

REVISIONS

NO.	DATE	CHK	DONE BY	DESCRIPTION
A	12/08/15	MM	AP	ISSUED INTERNAL REVIEW
B	12/08/15	MM	AP	ISSUED FOR DETAIL DESIGN
C	12/08/15	MM	AP	ISSUED FOR SQUAD CHECK
D	01/10/15	MM	AP	ISSUED FOR CLIENT REVIEW
E	16/11/15	MM	AP	ISSUED CLIENT APPROVAL
0	25/11/15	MM	AP	ISSUED FOR CONSTRUCTION

WorleyParsons
resources & energy
39 MELROSE BOULEVARD, MELROSE ARCH, JOHANNESBURG
P.O. Box 61232, MARSHALLTOWN, 2107
TEL: +27 (0)11 218 3000
FAX: +27(0)11 218 3100
www.worleyparsons.com
WorleyParsons RSA (Pty) Ltd.

MESCH arquitectos

CLIENT

MOZAMBIQUE GAS DEVELOPMENT PROJECT

Anadarko Moçambique Área 1, Lda

PROJECT
AMA 1
RESETTLEMENT
VILLAGE

DRAWING DESCRIPTION
PLANTA DO PASSEIO DA ESCOLA PRIMARIA

PRIMARY SCHOOL SIDEWALK LAYOUT

SCALE	DATE
A3@AS SHOWN	NOV 2015

DRAWING NUMBER:	REV Nº
C00290-00-AR-DLP-0028-001	0

ANADARKO DRAWING NUMBER:
EA-MZ-CI0100-WOR-E05-00602-01

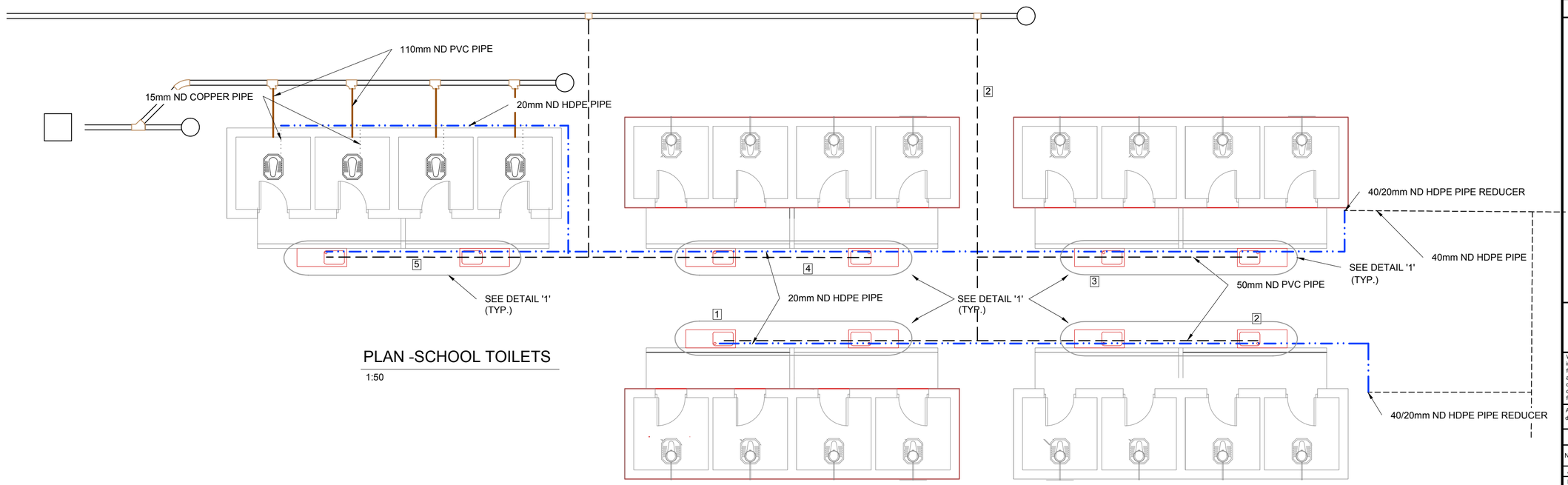

PLAN -SCHOOL TOILETS

1:50

COMMUNITY FACILITIES - SCHOOL - INTERNAL DRAINAGE CONNECTIONS			
SCHOOL TOILETS			
No	DESCRIPTION	UNIT	QUANTITY
1	S-TRAP	No.	2
	50mm ND PVC PIPE	m	4m
	DRAIN GULLEY COMPLETE	No.	2
2	S-TRAP	No.	2
	50mm ND PVC PIPE	m	15m
	DRAIN GULLEY COMPLETE	No.	2
3	S-TRAP	No.	2
	50mm ND PVC PIPE	m	4m
	DRAIN GULLEY COMPLETE	No.	2
	110x50mm - SINGLE 87.5° PLAIN REDUCING JUNCTION	No.	1
4	S-TRAP	No.	2
	50mm ND PVC PIPE	m	12m
	DRAIN GULLEY COMPLETE	No.	2
	110x50mm - SINGLE 87.5° PLAIN REDUCING JUNCTION	No.	1
	110mm ND PVC PIPE	m	5m
5	S-TRAP	No.	2
	50mm ND PVC PIPE	m	18m
	DRAIN GULLEY COMPLETE	No.	2

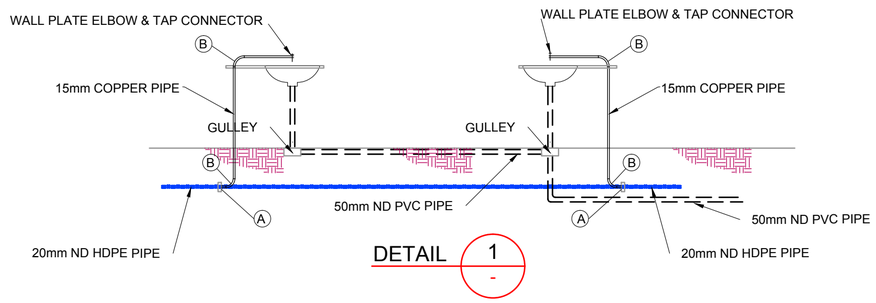

DETAIL 1 / -

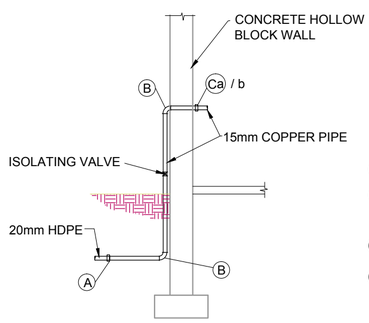

(A) 20mm/15mm HDPE / COPPER ADAPTOR

(B) 90° ELBOW - COPPER

TOILETS:

(Ca) STRAIGHT COUPLER. COPPER TO MALE CONNECTION

(Cb) KITCHEN SINK/ HAND WASH BASIN / SHOWER:
WALL PLATE ELBOW TAP CONNECTOR.COPPER TO FEMALE CONNECTION

NOTE: INTERNAL PIPE TO BE INSTALLED FLUSH AGAINST WALL

TYPICAL WATER SUPPLY DETAIL AT BUILDINGS

NTS

COMMUNITY FACILITIES - COMMUNITY CENTRE WATER SUPPLY			
ADMIN. BUILDING			
No	DESCRIPTION	UNIT	QUANTITY
(A)	20mm/15mm HDPE / COPPER ADAPTOR	No.	1
(B)	90° ELBOW - COPPER	No.	1
(Ca)	TOILETS:		
	STRAIGHT COUPLER. COPPER TO MALE CONN.	No.	4
(Cb)	KITCHEN SINK/ HAND WASH BASIN / SHOWER:		
	WALL PLATE ELBOW TAP CONNECTOR.Cu TO FEM. CONN.	No.	10
	15mm COPPER PIPE	m	20m
	20mm ND HDPE PIPE	m	10m
	40/20mm ND HDPE PIPE REDUCER	No.	2

NOTES

REFERENCE DRAWINGS:

SCHOOL:
C00290-00-WW-DRD-0019-001/002

LEGEND:

- 110mm ND PVC PIPE
- 15mm ND COPPER PIPE
- 50mm ND PVC PIPE
- 20mm ND HDPE PIPE
- 40mm ND HDPE PIPE

ISSUED FOR CONSTRUCTION

WorleyParsons RSA retains the copyright in all intellectual property, including designs and/or documents prepared in terms of this appointment for the project covered by the appointment. The client may use the designs and/or documents for the sole purpose of their intended use on this project only subject to payment for the design having been received. Use for any other purpose, whether or not the design and/or documents have been paid for constitutes an infringement of copyright, and all rights are reserved.

All dimensions must be verified on site before the works commence. Refer any discrepancies to the Engineer.

Copyright reserved

REVISIONS

NO.	DATE	CHECKED	DONE BY	DESCRIPTION
A	29/10/15		AR	ISSUED FOR INTERNAL REVIEW
B	17/10/15		AR	ISSUED FOR DETAIL DESIGN
C	18/10/15		AR	ISSUED FOR SQUAD CHECK
D	23/10/15		AR	ISSUED FOR CLIENT REVIEW
E	25/11/15		CT	ISSUED FOR CLIENT APPROVAL
0	08/12/15		CT	ISSUED FOR CONSTRUCTION

WorleyParsons
resources & energy
39 MELROSE BOULEVARD, MELROSE ARCH, JOHANNESBURG
P.O. Box 61232, MARSHALLTOWN, 2107
TEL: +27 (0)11 218 3000
FAX: +27(0)11 218 3100
www.worleyparsons.com
WorleyParsons RSA (Pty) Ltd.

	NAME	SIGNATURE	DATE
DRAWN BY:	A. RAJAH		29/10/2015
CHECKED:	L. PADAYACHEE		29/10/2015
DESIGNER:	L. PADAYACHEE		29/10/2015
PR ENG:	L. PADAYACHEE		29/10/2015
PROJECT ENG MANAGER:	L. PADAYACHEE		29/10/2015
LOCAL PR ENG:			
CLIENT:			

CLIENT

MOZAMBIQUE GAS DEVELOPMENT PROJECT

Anadarko
Moçambique Área 1, Lda

PROJECT
AMA 1
RESETTLEMENT
VILLAGE

DRAWING DESCRIPTION
COMMUNITY FACILITIES
SCHOOL
TOILETS
INTERNAL RETICULATIONS

SCALE	DATE
1:50 ORIGINAL DWG SIZE A1	NOVEMBER 2015

DRAWING NUMBER: C00290-00-PL-DRD-0012-001
REV NO: 0

ANADARKO DRAWING NUMBER
EZ-MZ-CI0100-WOR-E05-00117-01

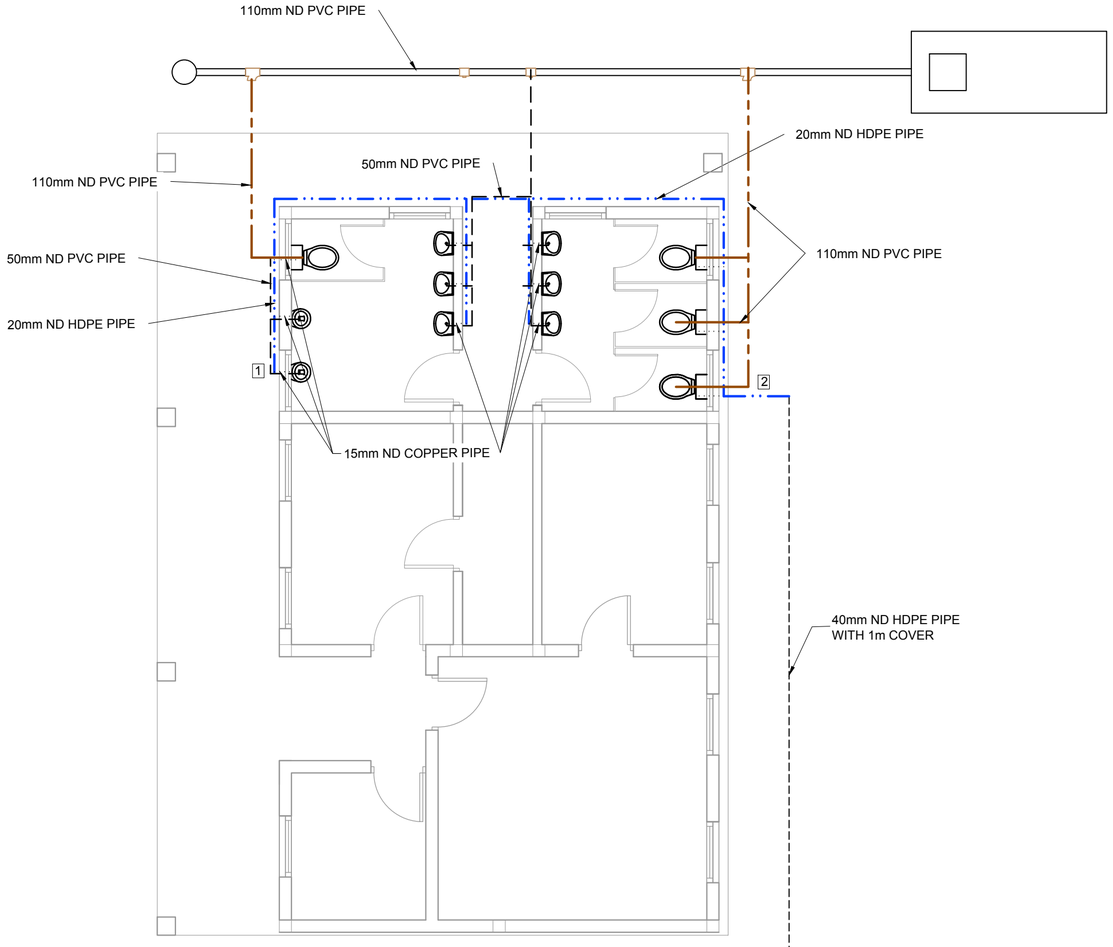

PLAN - SCHOL ADMIN. BUILDING

1:50

COMMUNITY FACILITIES - SCHOOL - INTERNAL DRAINAGE CONNECTIONS			
ADMIN. BUILDING			
No	DESCRIPTION	UNIT	QUANTITY
1	P-TRAP	No.	5
	50mm - 87.5° ACCESS BEND	No.	4
	50mm - DOUBLE 87.5° PLAIN JUNCTION	No.	3
	110x50mm - SINGLE 87.5° PLAIN REDUCING JUNCTION	No.	2
	50mm ND PVC PIPE	m	7m
	110x50mm - 87.5° VENTHORN BEND	No.	1
	50mm VENT COWL	No.	1
	110 - 87.5° PLAIN BEND	No.	2
	110 ND PVC PIPE	m	4m
2	110x50mm - 87.5° VENTHORN BEND	No.	3
	50mm VENT COWL	No.	3
	110 - 87.5° PLAIN BEND	No.	3
	110mm - DOUBLE 87.5° PLAIN JUNCTION	No.	4
	110x50mm - SINGLE 87.5° PLAIN REDUCING JUNCTION	No.	1
	50mm - 87.5° ACCESS BEND	No.	1
	110 ND PVC PIPE	m	8m
	P-TRAP	No.	3
	50mm ND PVC PIPE	m	7m

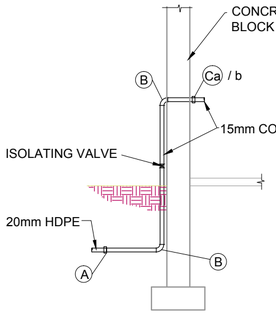

(A) 20mm/15mm HDPE / COPPER ADAPTOR

(B) 90° ELBOW - COPPER

TOILETS:

(Ca) STRAIGHT COUPLER. COPPER TO MALE CONNECTION

(Cb) KITCHEN SINK/ HAND WASH BASIN / SHOWER:
WALL PLATE ELBOW TAP CONNECTOR.COPPER TO FEMALE CONNECTION

NOTE: INTERNAL PIPE TO BE INSTALLED FLUSH AGAINST WALL

TYPICAL WATER SUPPLY DETAIL AT BUILDINGS

NTS

COMMUNITY FACILITIES - COMMUNITY CENTRE WATER SUPPLY			
ADMIN. BUILDING			
No	DESCRIPTION	UNIT	QUANTITY
(A)	20mm/15mm HDPE / COPPER ADAPTOR	No.	12
(B)	90° ELBOW - COPPER	No.	24
(Ca)	TOILETS:		
	STRAIGHT COUPLER. COPPER TO MALE CONN.	No.	6
(Cb)	KITCHEN SINK/ HAND WASH BASIN / SHOWER:		
	WALL PLATE ELBOW TAP CONNECTOR.Cu TO FEM. CONN.	No.	6
	15mm COPPER PIPE	m	20m
	20mm ND HDPE PIPE	m	19m

NOTES

REFERENCE DRAWINGS:

SCHOOL:
C00290-00-WW-DRD-0019-001

LEGEND:

- 110mm ND PVC PIPE
- 15mm ND COPPER PIPE
- 50mm ND PVC PIPE
- 20mm ND HDPE PIPE
- 40mm ND HDPE PIPE

ISSUED FOR CONSTRUCTION

WorleyParsons RSA retains the copyright in all intellectual property, including designs and/or documents prepared in terms of this appointment for the project covered by the appointment. The client may use the designs and/or documents for the sole purpose of their intended use on this project only subject to payment for the design having been received. Use for any other purpose, whether or not the design and/or documents have been paid for constitutes an infringement of copyright, and all rights are reserved.

All dimensions must be verified on site before the works commence. Refer any discrepancies to the Engineer.

Copyright reserved

REVISIONS

NO.	DATE	CHECKED	DONE BY	DESCRIPTION
A	29/10/15		AR	ISSUED FOR INTERNAL REVIEW
B	17/10/15		AR	ISSUED FOR DETAIL DESIGN
C	18/10/15		AR	ISSUED FOR SQUAD CHECK
D	23/10/15		AR	ISSUED FOR CLIENT REVIEW
E	25/11/15		CT	ISSUED FOR CLIENT APPROVAL
0	08/12/15		CT	ISSUED FOR CONSTRUCTION

WorleyParsons
resources & energy
39 MELROSE BOULEVARD, MELROSE ARCH, JOHANNESBURG
P.O. Box 61232, MARSHALLTOWN, 2107
TEL: +27 (0)11 218 3000
FAX: +27(0)11 218 3100
www.worleyparsons.com
WorleyParsons RSA (Pty) Ltd.

	NAME	SIGNATURE	DATE
DRAWN BY:	A. RAJAH		29/10/2015
CHECKED:	L. PADAYACHEE		29/10/2015
DESIGNER:	L. PADAYACHEE		29/10/2015
PR ENG:	L. PADAYACHEE		29/10/2015
PROJECT ENG MANAGER:	L. PADAYACHEE		29/10/2015
LOCAL PR ENG:			
CLIENT:			

CLIENT

MOZAMBIQUE GAS DEVELOPMENT PROJECT

Anadarko
Moçambique Área 1, Lda

PROJECT
AMA 1
RESETTLEMENT
VILLAGE

DRAWING DESCRIPTION
COMMUNITY FACILITIES
SCHOOL:
INTERNAL RETICULATIONS

SCALE	DATE
1:50 ORIGINAL DWG SIZE A1	NOVEMBER 2015

DRAWING NUMBER	REV NO
C00290-00-PL-DRD-0011-001	0

ANADARKO DRAWING NUMBER
EZ-MZ-CI0100-WOR-E05-00116-01

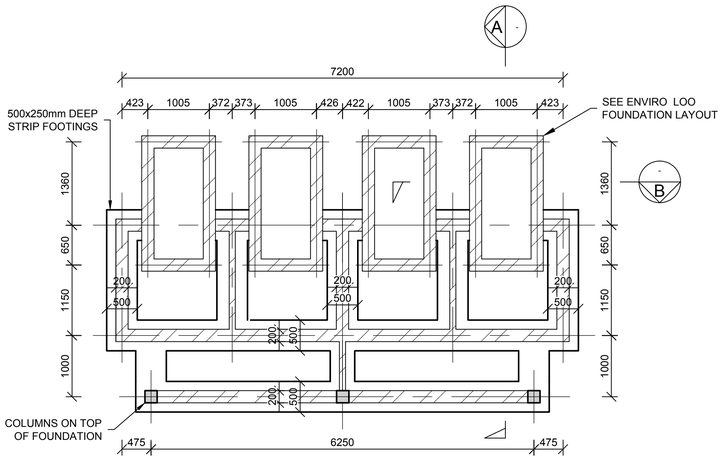

LATRINES FOUNDATION LAYOUT

SCALE: 1:50

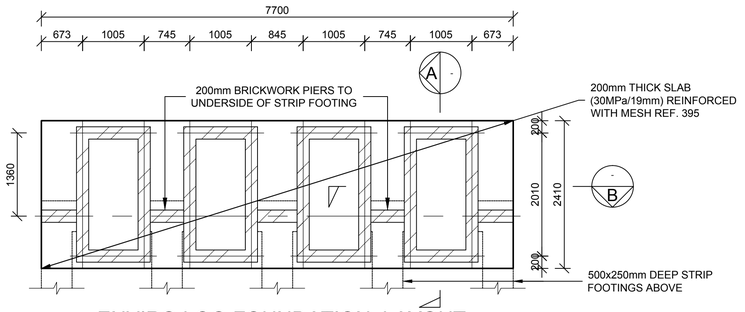

ENVIRO LOO FOUNDATION LAYOUT

SCALE: 1:25

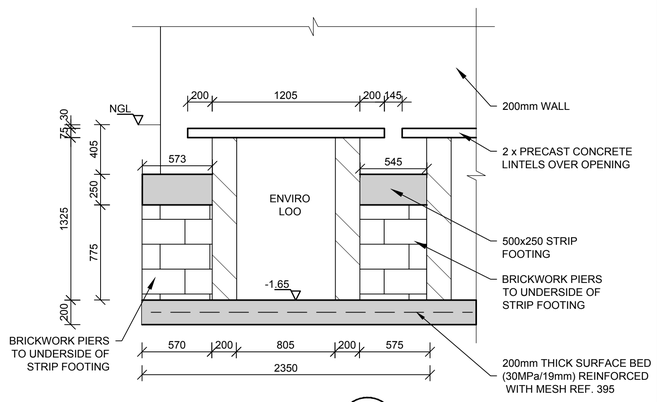

SECTION B

SCALE 1: 25

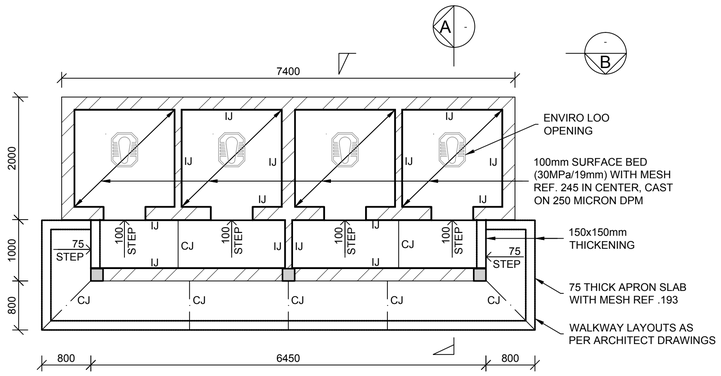

LATRINES SURFACE BED LAYOUT

SCALE: 1:50

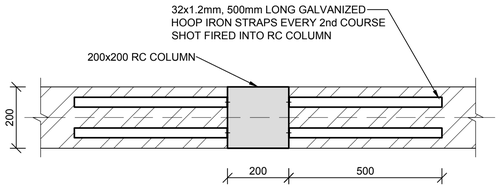

TYPICAL HOOP IRON JOINT

SCALE 1:10

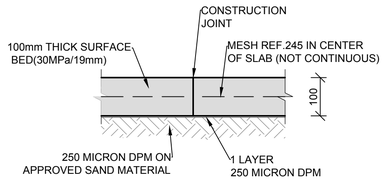

TYPICAL CONSTRUCTION JOINT (C.J.)

SCALE 1:10

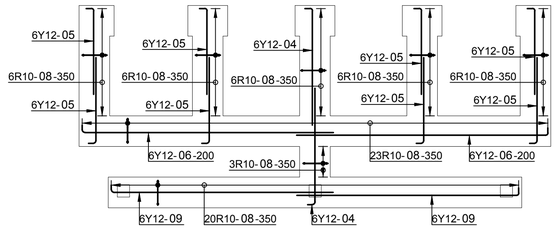

LATRINES FOUNDATION REINFORCEMENT

SCALE: 1:50

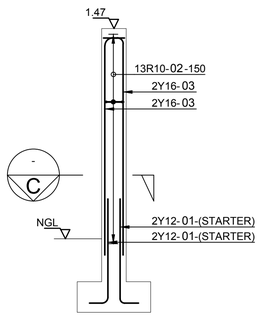

TYPICAL COLUMN REINFORCEMENT

SCALE 1 : 25

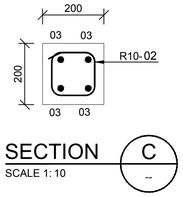

SECTION C

SCALE 1: 10

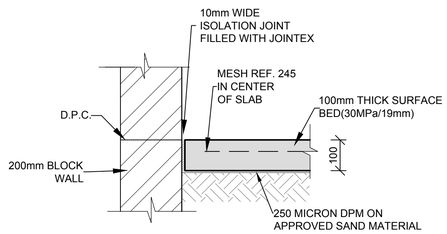

ISOLATION JOINT (I.J.)

SCALE 1:10

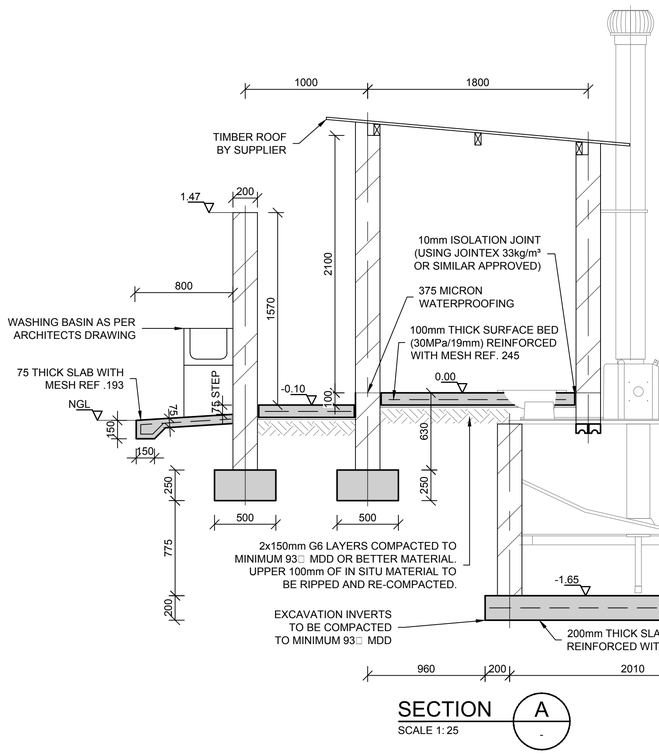

SECTION A

SCALE 1: 25

SCALE FOR REDUCED PLAN
0 10 20 30 40 50
50mm ON ORIGINAL DRAWING

NOTES

REFER TO STRUCTURAL GENERAL NOTES
EA-MZ-CI0000-WOR-B18-00001-01

REFER TO BULK WATER DRAWING
EA-MZ-CI0100-WOR-E05-01295-02

REFER TO BENDING SCHEDULE 43
ON DRAWING EA-MZ-CI0100-WOR-E05-00067-01

ISSUED FOR CONSTRUCTION

WorleyParsons RSA retains the copyright in all intellectual property, including designs and/or documents prepared in terms of this appointment for the project covered by the appointment. The client may use the designs and/or documents for the sole purpose of their intended use on this project only subject to payment for the design having been received. Use for any other purpose, whether or not the design and/or documents have been paid for constitutes an infringement of copyright, and all rights are reserved.

All dimensions must be verified on site before the works commence. Refer any discrepancies to the Engineer.

Copyright reserved

REVISIONS

NO.	DATE	CHECKED	DONE BY	DESCRIPTION
A	21/10/15	TS	NR	ISSUED FOR INTERNAL REVIEW
B	21/10/15	TS	NR	ISSUED FOR DETAIL DESIGN
C	21/10/15	TS	NR	ISSUED FOR SQUAD CHECK
D	28/10/15	TS	NR	ISSUED FOR CLIENT REVIEW
E	17/11/15	TS	NR	ISSUED FOR CLIENT APPROVAL
0	03/12/15	TS	NR	ISSUED FOR CONSTRUCTION

WorleyParsons
resources & energy
39 MELROSE BOULEVARD, MELROSE ARCH, JOHANNESBURG
P.O. Box 61232, MARSHALLTOWN, 2107
TEL: +27 (0)11 218 3000
FAX: +27(0)11 218 3100
www.worleyparsons.com
WorleyParsons RSA (Pty) Ltd.

	NAME	SIGNATURE	DATE
DRAWN BY:	N ROBINSON		03/12/15
CHECKED :	T SNYDERS		03/12/15
DESIGNER :	T SNYDERS		03/12/15
PR ENG :	I ROBINSON		03/12/15
PROJECT ENG MANAGER	L PADAYACHEE		03/12/15
LOCAL PR ENG :			
CLIENT:			

CLIENT

MOZAMBIQUE GAS DEVELOPMENT PROJECT

Anadarko Moçambique Área 1, Lda

PROJECT
AMA 1
RESETTLEMENT
VILLAGE

DRAWING DESCRIPTION

PRIMARY SCHOOL:
ENVIRO LOO LATRINES

SCALE	DATE
AS SHOWN (ORIGINAL DWG SIZE A1)	DEC 2015

DRAWING NUMBER	REV NO
C00290-00-ST-DAL-0065-001	0

ANADARKO DRAWING NUMBER
EA-MZ-CI0100-WOR-E05-00055-01

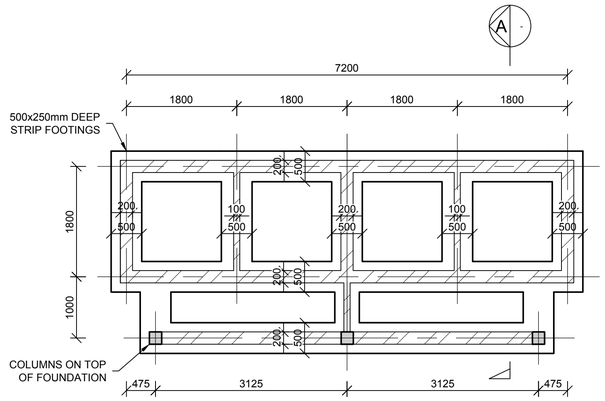

LATRINES FOUNDATION LAYOUT
SCALE: 1:50

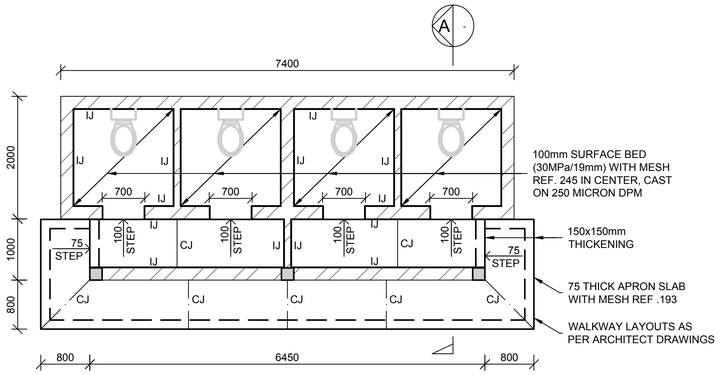

LATRINES SURFACE BED LAYOUT
SCALE: 1:50

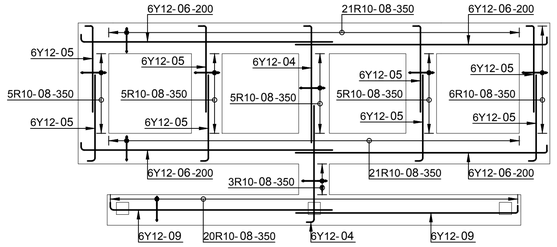

LATRINES FOUNDATION REINFORCEMENT
SCALE: 1:50

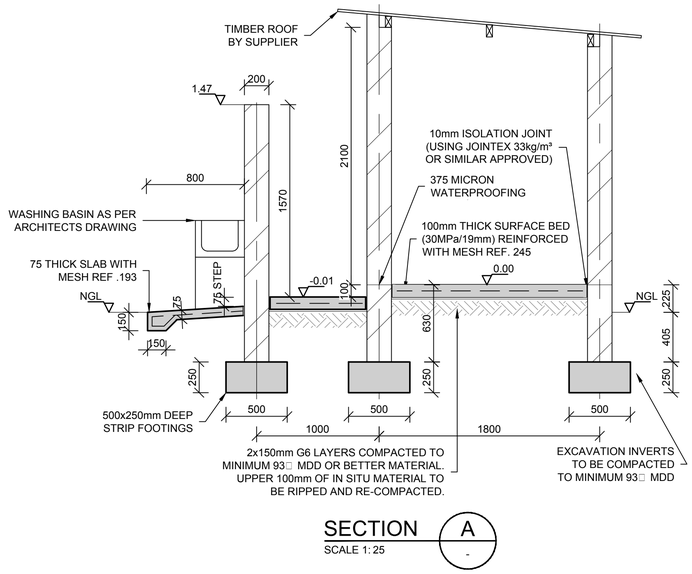

SECTION A
SCALE 1: 25

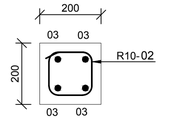

SECTION C
SCALE 1: 10

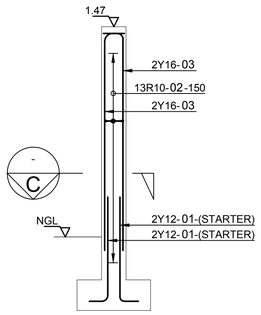

TYPICAL COLUMN REINFORCEMENT
SCALE 1 : 25

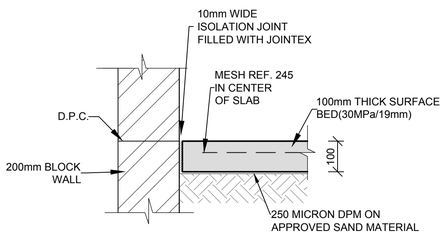

ISOLATION JOINT (I.J.)
SCALE 1:10

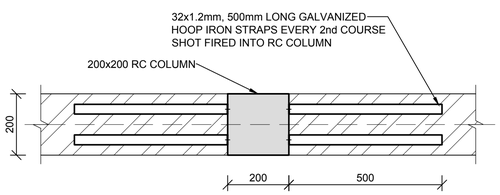

TYPICAL HOOP IRON JOINT
SCALE 1:10

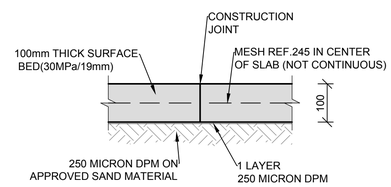

TYPICAL CONSTRUCTION JOINT (C.J.)
SCALE 1:10

SCALE FOR REDUCED PLAN
0 10 20 30 40 50
50mm ON ORIGINAL DRAWING

NOTES

REFER TO STRUCTURAL GENERAL NOTES
EA-MZ-CI0000-WOR-B18-00001-01

REFER TO BULK WATER DRAWING
EA-MZ-CI0100-WOR-E05-01295-02

REFER TO BENDING SCHEDULE 42
ON DRAWING EA-MZ-CI0100-WOR-E05-00066-01

ISSUED FOR CONSTRUCTION

WorleyParsons RSA retains the copyright in all intellectual property, including designs and/or documents prepared in terms of this appointment for the project covered by the appointment. The client may use the designs and/or documents for the sole purpose of their intended use on this project only subject to payment for the design having been received. Use for any other purpose, whether or not the design and/or documents have been paid for constitutes an infringement of copyright, and all rights are reserved.

All dimensions must be verified on site before the works commence. Refer any discrepancies to the Engineer.

Copyright reserved

REVISIONS

NO.	DATE	CHECKED	DONE BY	DESCRIPTION
A	21/10/15	TS	NR	ISSUED FOR INTERNAL REVIEW
B	21/10/15	TS	NR	ISSUED FOR DETAIL DESIGN
C	21/10/15	TS	NR	ISSUED FOR SQUAD CHECK
D	28/10/15	TS	NR	ISSUED FOR CLIENT REVIEW
E	17/11/15	TS	NR	ISSUED FOR CLIENT APPROVAL
0	03/12/15	TS	NR	ISSUED FOR CONSTRUCTION

WorleyParsons
resources & energy
39 MELROSE BOULEVARD, MELROSE ARCH, JOHANNESBURG
P.O. Box 61232, MARSHALLTOWN, 2107
TEL: +27 (0)11 218 3000
FAX: +27(0)11 218 3100
www.worleyparsons.com
WorleyParsons RSA (Pty) Ltd.

	NAME	SIGNATURE	DATE
DRAWN BY:	N ROBINSON		03/12/15
CHECKED :	T SNYDERS		03/12/15
DESIGNER :	T SNYDERS		03/12/15
PR ENG :	I ROBINSON		03/12/15
PROJECT ENG MANAGER	L PADAYACHEE		03/12/15
LOCAL PR ENG :			
CLIENT:			

CLIENT

MOZAMBIQUE GAS DEVELOPMENT PROJECT

Anadarko Moçambique Área 1, Lda

PROJECT
AMA 1
RESETTLEMENT
VILLAGE

DRAWING DESCRIPTION

PRIMARY SCHOOL:
FLUSHING TOILET
LATRINES

SCALE	DATE
AS SHOWN (ORIGINAL DWG SIZE A1)	DEC 2015

DRAWING NUMBER	REV NO
C00290-00-ST-DAL-0064-001	0

ANADARKO DRAWING NUMBER
EA-MZ-CI0100-WOR-E05-00054-01

GATE SCHEDULE / Mapa de vãos: Portões

ALL DIMENSIONS AND LEVELS ARE TO BE CHECKED/VERIFIED ON SITE AND ANY DISCREPENCIES ARE TO BE REPORTED TO THE ARCHITECT
TODAS DIMENSÕES E NÍVEIS DEVEM SER VERIFICADOS NA OBRA E QUALQUER DISCREPÂNCIA DEVERÁ SER COMUNICADA AO ARQUITECTO

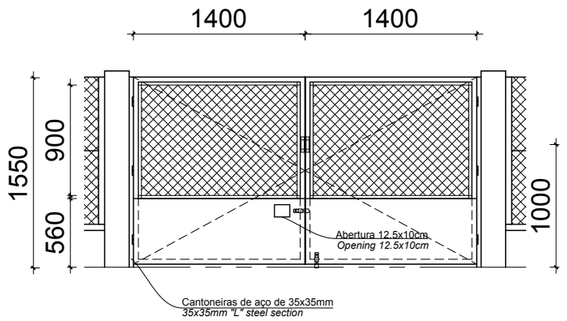

Code: Codigo:	GATE 2	**Position:** Localização:	External Main Entrance	**Qty:** Qtd:	1
System: Sistema:	**2 folhas de abrir** / *2 openable leafs*				
Materials: Materials:	**TUBO DE AÇO DE 40X20MM + REDE TUBARÃO** / *40X20 HOLLOW STEEL SECTION + CHAIN LINK FENCING* **VARÃO DE AÇO DE Ø10MM - ARMAÇÃO DA REDE** / *Ø10MM SOLID STEEL SECTION - CHAIN LINK FENCING FRAME* **CHAPA DE AÇO DE E=1MM** / *1MM STEEL SHEET*				
Finishing: Acabamento:	**ZARCÃO** / *ZINK PHOSPHATE PRIMER* **TINTA ESMALTE DE COR** / *COLOUR ENAMEL PAINT*				
Ironmongery: Ferragens:	**4 PUXADORES + 2 TRINCOS DE CULATRA PARA CADEADO DE 5" EM AÇO** / *4 STEEL KNOBS + 2 5" STEEL BOLT FOR LOCK*				
Materials: Materiais:	**CANTONEIRAS DE AÇO DE 35X35MM** / *35X35MM "L" STEEL SECTION*				
Fixing: Fixação:	**CHUMBADO À PAREDE** / *PLUGGED TO WALL*				
Ironmongery: Ferragens:	**6 DOBRADIÇAS DE 4" EM AÇO** / *4" 6 STEEL HINGES*				
Finishing: Acabamento:	**ZARCÃO** / *ZINK PHOSPHATE PRIMER* **TINTA ESMALTE DE COR** / *COLOUR ENAMEL PAINT*				

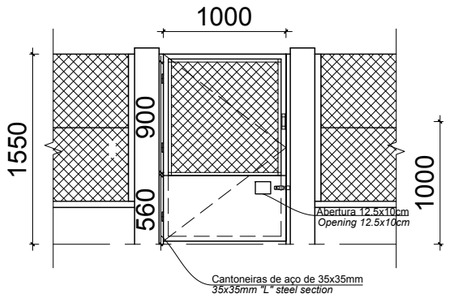

Code: Codigo:	GATE 1	**Position:** Localização:	External Main Entrance	**Qty:** Qtd:	1
System: Sistema:	**1 folha de abrir** / *1 openable leaf*				
Materials: Materials:	**TUBO DE AÇO DE 40X20MM + REDE TUBARÃO** / *40X20 HOLLOW STEEL SECTION + CHAIN LINK FENCING* **VARÃO DE AÇO DE Ø10MM - ARMAÇÃO DA REDE** / *Ø10MM SOLID STEEL SECTION - CHAIN LINK FENCING FRAME* **CHAPA DE AÇO DE E=1MM** / *1MM STEEL SHEET*				
Finishing: Acabamento:	**ZARCÃO** / *ZINK PHOSPHATE PRIMER* **TINTA ESMALTE DE COR** / *COLOUR ENAMEL PAINT*				
Ironmongery: Ferragens:	**2 PUXADORES + 1 TRINCO DE CULATRA PARA CADEADO DE 5" EM AÇO** / *2 STEEL KNOBS + 1 5" STEEL BOLT FOR LOCK*				
Materials: Materiais:	**CANTONEIRAS DE AÇO DE 35X35MM** / *35X35MM "L" STEEL SECTION*				
Fixing: Fixação:	**CHUMBADO À PAREDE** / *PLUGGED TO WALL*				
Ironmongery: Ferragens:	**3 DOBRADIÇAS DE 4" EM AÇO** / *4" 3 STEEL HINGES*				
Finishing: Acabamento:	**ZARCÃO** / *ZINK PHOSPHATE PRIMER* **TINTA ESMALTE DE COR** / *COLOUR ENAMEL PAINT*				

NOTES:

1. ALL DOORS WILL BE OF UMBILA OR OF EQUIVALENT WOOD QUALITY & APPROVED BY CLIENT
2. ALL OF THE CASEMENT WINDOWS WILL ALSO TAKE ONE MORE CASEMENT LEAF INSIDE IN MOSQUITO NET
3. ALL OPENINGS SIZE TO BE CONFIRMED ON SITE BEFORE MANUFACTURING
4. SHOP DRAWINGS TO BE APPROVED BY ARCHITECT BEFORE MANUFACTURING
5. REFER TO WINDOW & DOOR SCHEDULE KEY PLAN

ESTE DESENHO É PARA SER LIDO EM CONJUNTO COM:
THIS DRAWING IS TO BE READ IN CONJUCTION WITH:

ARCHITECTURAL
EA-MZ-CI0100-WOR-E04-00600-01
EA-MZ-CI0100-WOR-E04-00505-01
EA-MZ-CI0100-WOR-E04-00600-02
EA-MZ-CI0100-WOR-E04-00606-01
EA-MZ-CI0100-WOR-E05-00044-01

ISSUED FOR CONSTRUCTION

WorleyParsons RSA retains the copyright in all intellectual property, including designs and/or documents prepared in terms of this appointment for the project covered by the appointment. The client may use the designs and/or documents for the sole purpose of their intended use on this project only subject to payment for the design having been received. Use for any other purpose, whether or not the design and/or documents have been paid for constitutes an infringement of copyright, and all rights are reserved.

All dimensions must be verified on site before the works commence. Refer any discrepancies to the Engineer.

Copyright reserved

REVISIONS

NO.	DATE	CHK	DONE BY	DESCRIPTION
A	12/08/15	MM	AP	ISSUED INTERNAL REVIEW
B	12/08/15	MM	AP	ISSUED FOR DETAIL DESIGN
C	12/08/15	MM	AP	ISSUED FOR SQUAD CHECK
D	01/10/15	MM	AP	ISSUED FOR CLIENT REVIEW
E	16/11/15	MM	AP	ISSUED CLIENT APPROVAL
0	25/11/15	MM	AP	ISSUED FOR CONSTRUCTION

WorleyParsons
resources & energy
39 MELROSE BOULEVARD, MELROSE ARCH, JOHANNESBURG
P.O. Box 61232, MARSHALLTOWN, 2107
TEL: +27 (0)11 218 3000
FAX: +27(0)11 218 3100
www.worleyparsons.com
WorleyParsons RSA (Pty) Ltd.

MESCH arquitectos

CLIENT

MOZAMBIQUE GAS DEVELOPMENT PROJECT

Anadarko Moçambique Área 1, Lda

PROJECT
AMA 1
RESETTLEMENT
VILLAGE

DRAWING DESCRIPTION
ESCOLA PRIMÁRIA MAPA DE VÃOS FOLHA 3 DE 3

PRIMARY SCHOOL WINDOW & DOOR SCHEDULE SHEET 3 OF 3

SCALE	DATE
A3@AS SHOWN	NOV 2015

DRAWING NUMBER:	REV Nº
C00290-00-AR-SCH-0004-003	0

ANADARKO DRAWING NUMBER:
EA-MZ-CI0100-WOR-E05-00044-03

WINDOW SCHEDULE / Mapa de vãos: Janelas

ALL DIMENSIONS AND LEVELS ARE TO BE CHECKED/VERIFIED ON SITE AND ANY DISCREPENCIES ARE TO BE REPORTED TO THE ARCHITECT
TODAS DIMENSÕES E NÍVEIS DEVEM SER VERIFICADOS NA OBRA E QUALQUER DISCREPÂNCIA DEVERÁ SER COMUNICADA AO ARQUITECTO

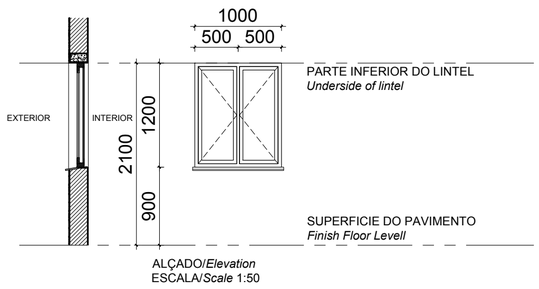

ALÇADO/*Elevation*
ESCALA/*Scale* 1:50

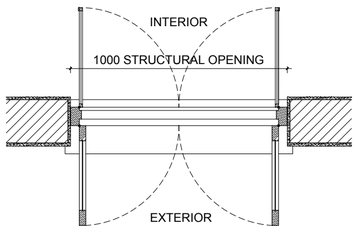

PLANTA/*Plan*
ESCALA/*Scale* 1:20

Code: Codigo:	W3	**Position:** Localização:	Admin. Block	**Qty:** Qtd:	7
Frame: Aro:	WOOD FRAME TO MANUFACTURERS SPECS SOLID TIMBER WINDOW , 2 GLASS PANELS ON OUTSIDE & 2 MOSQUITO SCREEN PANELS ON THE INSIDE WINDOW TO BE FROM SWARTLAND OR SIMILAR				
Finish: Acabamentos:	1 COAT PRIMER 1 COAT UNDERCOAT AND 2 COATS PLASCON ENAMEL DOORS & TRIMS COLOUR "LIGHT BROWN" OR EQUAL & APPROVED				
Ironmongery Ferragens	102 x 75 x 3mm PVD DOUBLE BALL BEARING BUTT HINGE X 2 PER WINDOW PANEL GLASS PANELS WITH CASEMENT FASTENER (HANDLE & WEDGE) & SLIDING STAY OPEN OUT ALL IN SATIN CHROME FINISH MOSQUITO SCREEN PANELS WITH CASEMENT FASTENER (HANDLE & WEDGE) IN SATIN CHROME FINISH				
Glazing: Vidros:	3mm CLEAR GLASS				
Glazing Notes:					

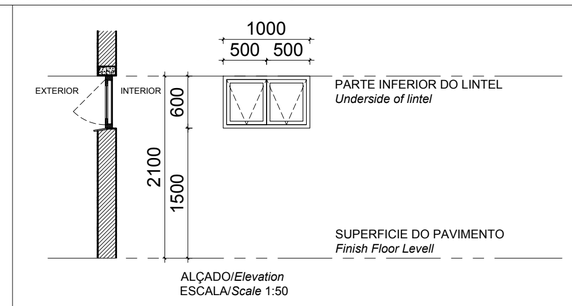

ALÇADO/*Elevation*
ESCALA/*Scale* 1:50

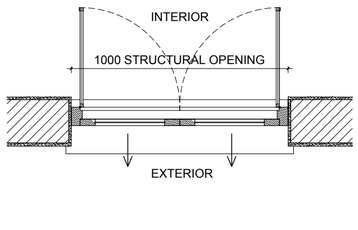

PLANTA/*Plan*
ESCALA/*Scale* 1:20

Code: Codigo:	W4	**Position:** Localização:	Classroom Blocks	**Qty:** Qtd:	40
Frame: Aro:	WOOD FRAME TO MANUFACTURERS SPECS SOLID TIMBER TOP HUNG WINDOW, 2 GLASS PANELS ON OUTSIDE & 2 MOSQUITO SCREEN PANELS ON THE INSIDE WINDOW TO BE FROM SWARTLAND OR SIMILAR				
Finish: Acabamentos:	1 COAT PRIMER 1 COAT UNDERCOAT AND 2 COATS PLASCON ENAMEL DOORS & TRIMS COLOUR "LIGHT BROWN" OR EQUAL & APPROVED				
Ironmongery Ferragens	PIVOT AT THE TOP WITH OUTWARD SWINGING SASH AND PUSH OUT LEVER TO MANUFACTURER SPEC´S. GLASS PANELS WITH CASEMENT FASTENER (HANDLE & WEDGE) & SLIDING STAY OPEN OUT ALL IN SATIN CHROME FINISH MOSQUITO SCREEN PANELS WITH CASEMENT FASTENER (HANDLE & WEDGE) IN SATIN CHROME FINISH				
Glazing: Vidros:	3mm CLEAR GLASS				
Glazing Notes:					

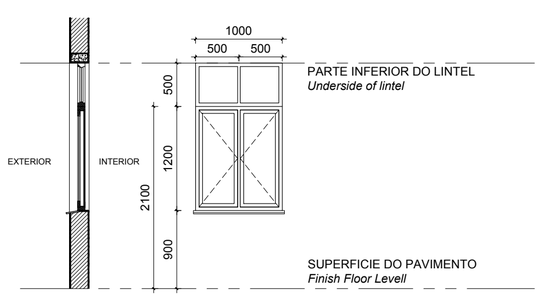

ALÇADO/*Elevation*
ESCALA/*Scale* 1:50

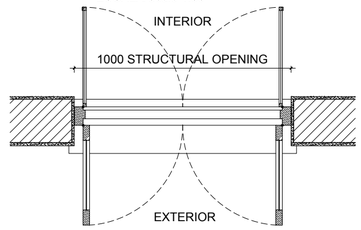

PLANTA/*Plan*
ESCALA/*Scale* 1:20

Code: Codigo:	W6	**Position:** Localização:	Classroom Blocks	**Qty:** Qtd:	50
Frame: Aro:	WOOD FRAME TO MANUFACTURERS SPECS SOLID TIMBER WINDOW , 2 GLASS PANELS ON OUTSIDE & 2 MOSQUITO SCREEN PANELS ON THE INSIDE WINDOW TO BE TYPE ZFIN - from SWARTLAND OR SIMILAR				
Finish: Acabamentos:	1 COAT PRIMER 1 COAT UNDERCOAT AND 2 COATS PLASCON ENAMEL DOORS & TRIMS COLOUR "LIGHT BROWN" OR EQUAL & APPROVED				
Ironmongery Ferragens	102 x 75 x 3mm PVD DOUBLE BALL BEARING BUTT HINGE X 2 PER WINDOW PANEL GLASS PANELS WITH CASEMENT FASTENER (HANDLE & WEDGE) & SLIDING STAY OPEN OUT ALL IN SATIN CHROME FINISH MOSQUITO SCREEN PANELS WITH CASEMENT FASTENER (HANDLE & WEDGE) IN SATIN CHROME FINISH				
Glazing: Vidros:	3mm CLEAR GLASS				
Glazing Notes:					

NOTES:

1. ALL DOORS WILL BE OF UMBILA OR OF EQUIVALENT WOOD QUALITY & APPROVED BY CLIENT
2. ALL OF THE CASEMENT WINDOWS WILL ALSO TAKE ONE MORE CASEMENT LEAF INSIDE IN MOSQUITO NET
3. ALL OPENINGS SIZE TO BE CONFIRMED ON SITE BEFORE MANUFACTURING
4. SHOP DRAWINGS TO BE APPROVED BY ARCHITECT BEFORE MANUFACTURING
5. REFER TO WINDOW & DOOR SCHEDULE KEY PLAN

ESTE DESENHO É PARA SER LIDO EM CONJUNTO COM:
THIS DRAWING IS TO BE READ IN CONJUCTION WITH:

ARCHITECTURAL
EA-MZ-CI0100-WOR-E04-00600-01
EA-MZ-CI0100-WOR-E04-00505-01
EA-MZ-CI0100-WOR-E04-00600-02
EA-MZ-CI0100-WOR-E04-00606-01
EA-MZ-CI0100-WOR-E05-00044-01

ISSUED FOR CONSTRUCTION

WorleyParsons RSA retains the copyright in all intellectual property, including designs and/or documents prepared in terms of this appointment for the project covered by the appointment. The client may use the designs and/or documents for the sole purpose of their intended use on this project only subject to payment for the design having been received. Use for any other purpose, whether or not the design and/or documents have been paid for constitutes an infringement of copyright, and all rights are reserved.

All dimensions must be verified on site before the works commence. Refer any discrepancies to the Engineer.

Copyright reserved

REVISIONS

NO.	DATE	CHECKED	DONE BY	DESCRIPTION
A	12/08/15	MM	AP	ISSUED FOR INTERNAL REVIEW
B	12/08/15	MM	AP	ISSUED FOR DETAIL DESIGN
C	12/08/15	MM	AP	ISSUED FOR SQUAD CHECK
D	01/10/15	MM	AP	ISSUED FOR CLIENT REVIEW
E	16/11/15	MM	AP	ISSUED CLIENT APPROVAL
0	25/11/15	MM	AP	ISSUED FOR CONSTRUCTION

WorleyParsons
resources & energy
39 MELROSE BOULEVARD, MELROSE ARCH, JOHANNESBURG
P.O. Box 61232, MARSHALLTOWN, 2107
TEL: +27 (0)11 218 3000
FAX: +27(0)11 218 3100
www.worleyparsons.com
WorleyParsons RSA (Pty) Ltd.

MESCH arquitectos

	NAME	SIGNATURE	DATE
DRAWN BY:	AP		
CHECKED :	MM		
DESIGNER :	AP		
PROJECT ENG MANAGER	L PADAYACHEE		
LOCAL PR ENG :			
CLIENT:			

CLIENT

MOZAMBIQUE GAS DEVELOPMENT PROJECT

Anadarko Moçambique Área 1, Lda

PROJECT
AMA 1 RESETTLEMENT VILLAGE

DRAWING DESCRIPTION
ESCOLA PRIMÁRIA MAPA DE VÃOS FOLHA 2 DE 3

PRIMARY SCHOOL WINDOW & DOOR SCHEDULE SHEET 2 OF 3

SCALE	DATE
AS SHOWN ORIGINAL DWG SIZE A2	NOV 2015

DRAWING NUMBER: C00290-00-AR-SCH-0004-002
REV NO: 0

ANADARKO DRAWING NUMBER: EA-MZ-CI0100-WOR-E05-00044-02

DOOR SCHEDULE / Mapa de vãos: Portas

ALL DIMENSIONS AND LEVELS ARE TO BE CHECKED/VERIFIED ON SITE AND ANY DISCREPENCIES ARE TO BE REPORTED TO THE ARCHITECT
TODAS DIMENSÕES E NÍVEIS DEVEM SER VERIFICADOS NA OBRA E QUALQUER DISCREPÂNCIA DEVERÁ SER COMUNICADA AO ARQUITECTO

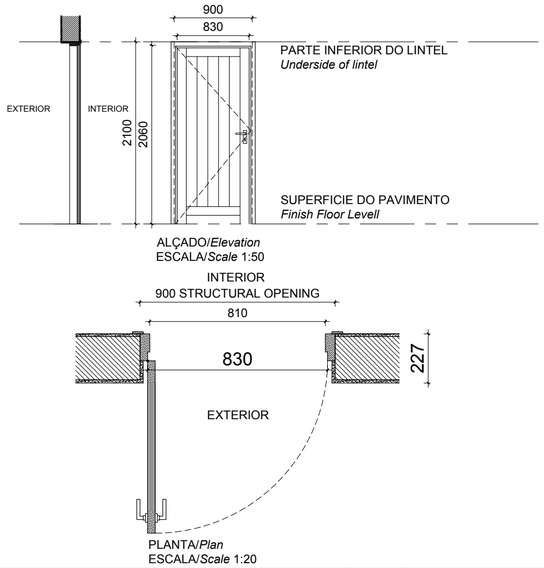

Code: Codigo:	D1	**Position:** Localização:	Classroom Block Admin. Block External Doors	**Qty:** Qtd:	15
Frame: Aro:	WOOD FRAME TO MANUFACTURERS SPECS SEMI SOLID SLATTED TIMBER DOOR DOORS TO BE TYPE PD60 - from SWARTLAND OR SIMILAR				
Finish: Acabamentos:	1 COAT PRIMER 1 COAT UNDERCOAT AND 2 COATS PLASCON ENAMEL DOORS & TRIMS COLOUR "LIGHT BROWN" OR EQUAL & APPROVED				
Ironmongery Ferragens	102 x 75 x 3mm PVD DOUBLE BALL BEARING BUTT HINGE X 3 PER DOOR LOCK (3 LEAVER) WITH HANDLES POLISHED CHROME FINISH SIMILAR TO YALE GOWER HANDLE				
Glazing: Vidros:					
Glazing Notes:					

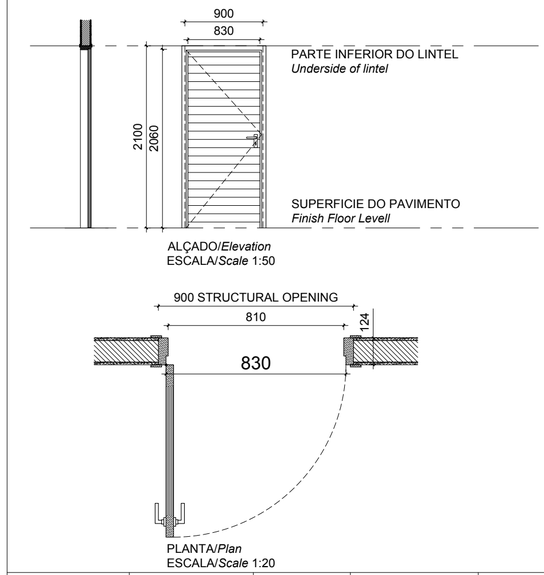

Code: Codigo:	D2	**Position:** Localização:	Administration Teacher´s Room	**Qty:** Qtd:	2
Frame: Aro:	WOOD FRAME TO MANUFACTURERS SPECS SEMI SOLID TIMBER DOOR WITH HORIZONTAL GROOVES DOORS TO BE TYPE ZKID - from SWARTLAND OR SIMILAR				
Finish: Acabamentos:	3 COATS CLEAR VARNISH				
Ironmongery Ferragens	102 x 75 x 3mm PVD DOUBLE BALL BEARING BUTT HINGE X 3 PER DOOR LOCK (2 LEAVER) WITH HANDLES POLISHED CHROME FINISH SIMILAR TO YALE GOWER HANDLE				
Glazing: Vidros:					
Glazing Notes:					

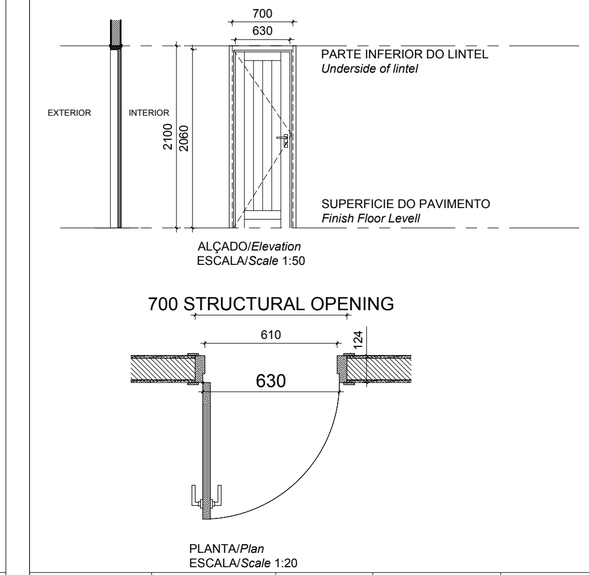

Code: Codigo:	D3	**Position:** Localização:	Administration Toilets	**Qty:** Qtd:	4
Frame: Aro:	WOOD FRAME TO MANUFACTURERS SPECS SEMI SOLID SLATTED TIMBER DOOR DOORS TO BE TYPE PD60 - from SWARTLAND OR SIMILAR				
Finish: Acabamentos:	1 COAT PRIMER 1 COAT UNDERCOAT AND 2 COATS PLASCON ENAMEL DOORS & TRIMS COLOUR "LIGHT BROWN" OR EQUAL & APPROVED				
Ironmongery Ferragens	102 x 75 x 3mm PVD DOUBLE BALL BEARING BUTT HINGE X 3 PER DOOR LOCK (3 LEAVER) WITH HANDLES POLISHED CHROME FINISH SIMILAR TO "UNION" PROTEA CB612 HANDLE				
Glazing: Vidros:					
Glazing Notes:					

NOTES:

1. ALL DOORS WILL BE OF UMBILA OR OF EQUIVALENT WOOD QUALITY & APPROVED BY CLIENT
2. ALL OF THE CASEMENT WINDOWS WILL ALSO TAKE ONE MORE CASEMENT LEAF INSIDE IN MOSQUITO NET
3. ALL OPENINGS SIZE TO BE CONFIRMED ON SITE BEFORE MANUFACTURING
4. SHOP DRAWINGS TO BE APPROVED BY ARCHITECT BEFORE MANUFACTURING
5. REFER TO WINDOW & DOOR SCHEDULE KEY PLAN

ESTE DESENHO É PARA SER LIDO EM CONJUNTO COM:
THIS DRAWING IS TO BE READ IN CONJUCTION WITH:

ARCHITECTURAL
EA-MZ-CI0100-WOR-E04-00600-01
EA-MZ-CI0100-WOR-E04-00505-01
EA-MZ-CI0100-WOR-E04-00600-02
EA-MZ-CI0100-WOR-E04-00606-01
EA-MZ-CI0100-WOR-E05-00044-01

ISSUED FOR CONSTRUCTION

WorleyParsons RSA retains the copyright in all intellectual property, including designs and/or documents prepared in terms of this appointment for the project covered by the appointment. The client may use the designs and/or documents for the sole purpose of their intended use on this project only subject to payment for the design having been received. Use for any other purpose, whether or not the design and/or documents have been paid for constitutes an infringement of copyright, and all rights are reserved.

All dimensions must be verified on site before the works commence. Refer any discrepancies to the Engineer.

Copyright reserved

REVISIONS

NO.	DATE	CHECKED	DONE BY	DESCRIPTION
A	12/08/15	MM	AP	ISSUED FOR INTERNAL REVIEW
B	12/08/15	MM	AP	ISSUED FOR DETAIL DESIGN
C	12/08/15	MM	AP	ISSUED FOR SQUAD CHECK
D	01/10/15	MM	AP	ISSUED FOR CLIENT REVIEW
E	16/11/15	MM	AP	ISSUED CLIENT APPROVAL
0	25/11/15	MM	AP	ISSUED FOR CONSTRUCTION

WorleyParsons
resources & energy
39 MELROSE BOULEVARD, MELROSE ARCH, JOHANNESBURG
P.O. Box 61232, MARSHALLTOWN, 2107
TEL: +27 (0)11 218 3000
FAX: +27(0)11 218 3100
www.worleyparsons.com
WorleyParsons RSA (Pty) Ltd.

MESCH arquitectos

	NAME	SIGNATURE	DATE
DRAWN BY:	AP		
CHECKED :	MM		
DESIGNER :	AP		
PROJECT ENG MANAGER	L PADAYACHEE		
LOCAL PR ENG :			
CLIENT:			

CLIENT

MOZAMBIQUE GAS DEVELOPMENT PROJECT

Anadarko Moçambique Área 1, Lda

PROJECT
AMA 1 RESETTLEMENT VILLAGE

DRAWING DESCRIPTION
ESCOLA PRIMÁRIA MAPA DE VÃOS FOLHA 1 DE 3

PRIMARY SCHOOL WINDOW & DOOR SCHEDULE SHEET 1 OF 3

SCALE	DATE
1:50 ORIGINAL DWG SIZE A2	NOV 2015

DRAWING NUMBER: C00290-00-AR-SCH-0004
REV NO: 0

ANADARKO DRAWING NUMBER
EA-MZ-CI0100-WOR-E05-00044-01

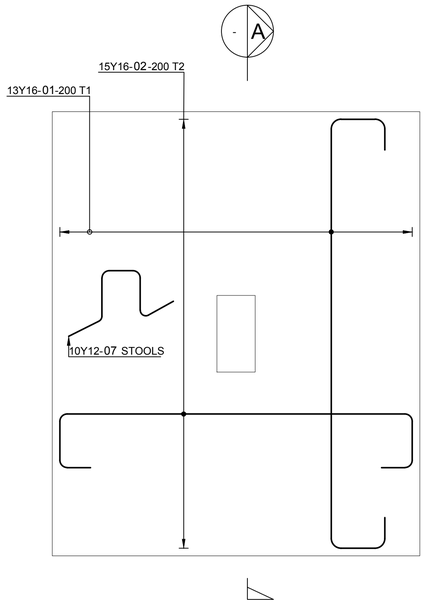

2900x2400x300 BASE
TOP REINFORCEMENT
SCALE 1 : 20

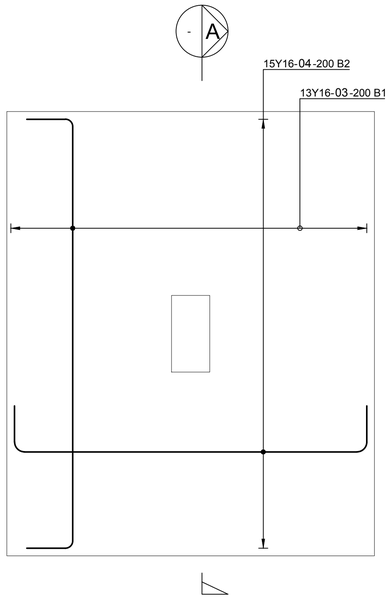

2900x2400x300 BASE
BOTTOM REINFORCEMENT
SCALE 1 : 20

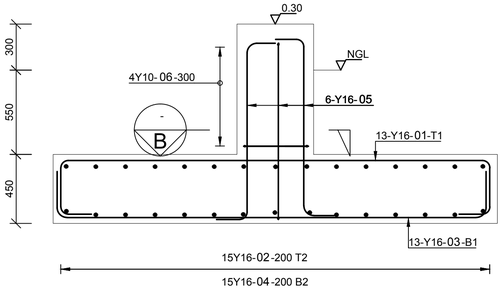

SECTION A
SCALE 1: 20

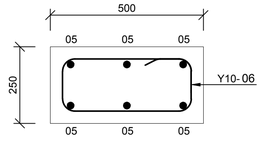

SECTION B
SCALE 1: 10

SCALE FOR REDUCED PLAN
0 10 20 30 40 50
50mm ON ORIGINAL DRAWING

NOTES

REFER TO STRUCTURAL GENERAL NOTES
EA-MZ-CI0000-WOR-B18-00001-01

REFER TO ARCHITECTS DRAWING
EA-MZ-CI0100-WOR-E04-00601-01

REFER TO ROOF LAYOUT DRAWING
EA-MZ-CI0100-WOR-E05-00017-01

REFER TO ROOF SECTIONS DRAWING
EA-MZ-CI0100-WOR-E05-00018-01

REFER TO ROOF SECTIONS DRAWING
EA-MZ-CI0100-WOR-E05-00019-01

REFER TO BENDING SCHEDULE 35
ON DRAWING EA-MZ-CI0100-WOR-E05-00065-01

ISSUED FOR CONSTRUCTION

WorleyParsons RSA retains the copyright in all intellectual property, including designs and/or documents prepared in terms of this appointment for the project covered by the appointment. The client may use the designs and/or documents for the sole purpose of their intended use on this project only subject to payment for the design having been received. Use for any other purpose, whether or not the design and/or documents have been paid for constitutes an infringement of copyright, and all rights are reserved.

All dimensions must be verified on site before the works commence. Refer any discrepancies to the Engineer.

Copyright reserved

REVISIONS

NO.	DATE	CHECKED	DONE BY	DESCRIPTION
A	06/10/15	TS	NR	ISSUED FOR INTERNAL REVIEW
B	07/10/15	TS	NR	ISSUED FOR DETAIL DESIGN
C	07/10/15	TS	NR	ISSUED FOR SQUAD CHECK
D	09/10/15	TS	NR	ISSUED FOR CLIENT REVIEW
E	17/11/15	TS	NR	ISSUED FOR CLIENT APPROVAL
0	03/12/15	TS	NR	ISSUED FOR CONSTRUCTION

WorleyParsons
resources & energy
39 MELROSE BOULEVARD, MELROSE ARCH, JOHANNESBURG
P.O. Box 61232, MARSHALLTOWN, 2107
TEL: +27 (0)11 218 3000
FAX: +27(0)11 218 3100
www.worleyparsons.com
WorleyParsons RSA (Pty) Ltd.

	NAME	SIGNATURE	DATE
DRAWN BY:	N ROBINSON		03/12/15
CHECKED :	T SNYDERS		03/12/15
DESIGNER :	T SNYDERS		03/12/15
PR ENG :	I ROBINSON		03/12/15
PROJECT ENG MANAGER	L PADAYACHEE		03/12/15
LOCAL PR ENG :			
CLIENT:			

CLIENT

MOZAMBIQUE GAS DEVELOPMENT PROJECT

Anadarko Moçambique Área 1, Lda

PROJECT
AMA 1
RESETTLEMENT
VILLAGE

DRAWING DESCRIPTION

PRIMARY SCHOOL
SPORTS FIELD
REINFORCEMENT

SCALE	DATE
AS SHOWN ORIGINAL DWG SIZE A1	DEC 2015

DRAWING NUMBER	REV NO
C00290-00-ST-DAL-0050-001	0

ANADARKO DRAWING NUMBER
EA-MZ-CI0100-WOR-E05-00020-01

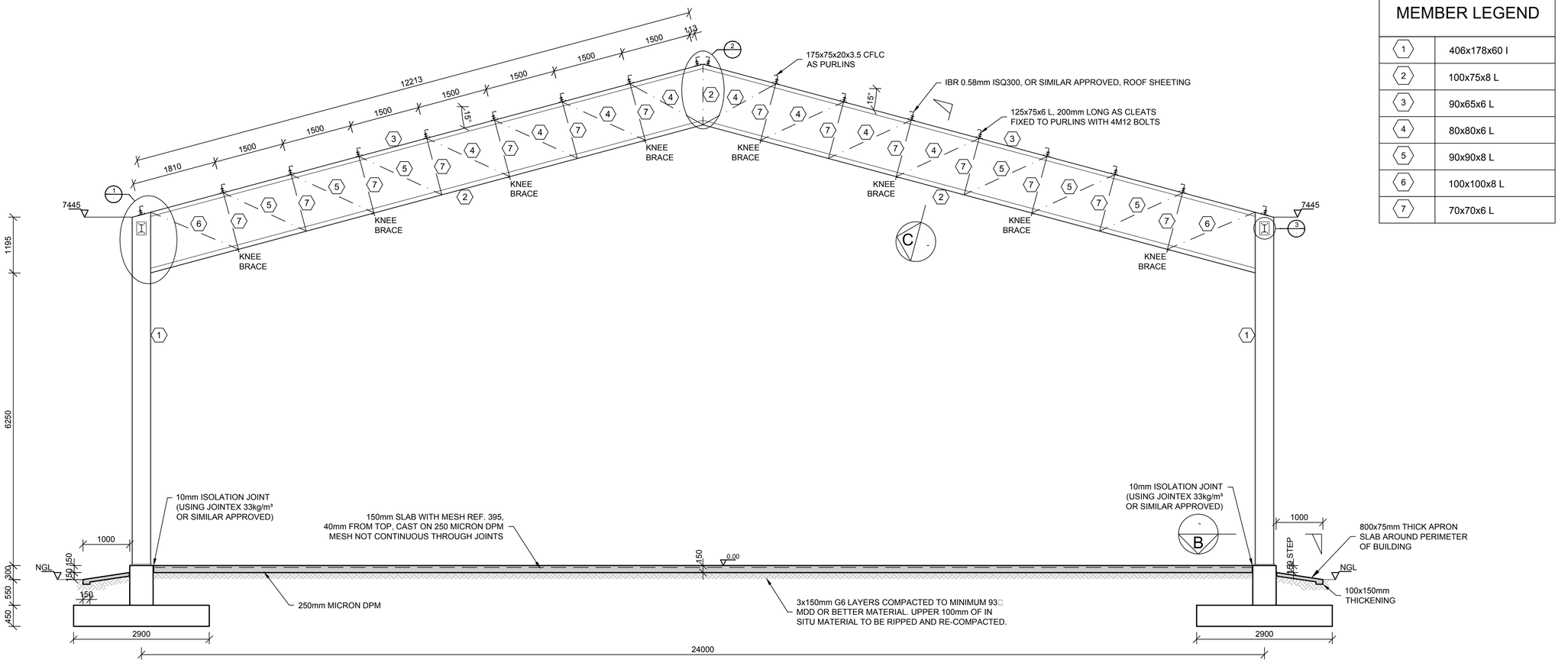

SECTION A
SCALE 1:50

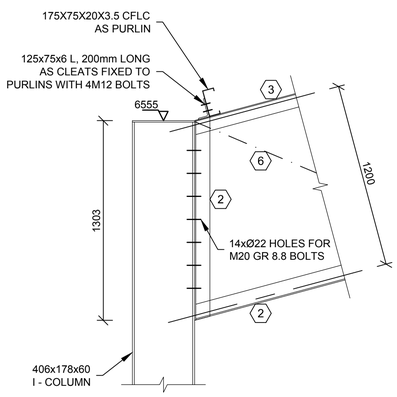

DETAIL 1
SCALE 1:20

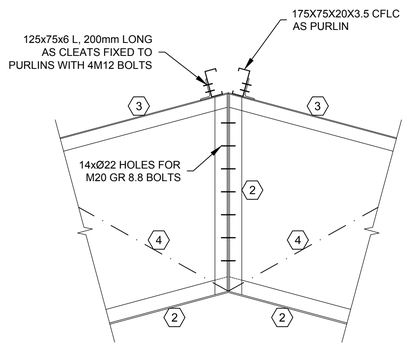

DETAIL 2
SCALE 1:20

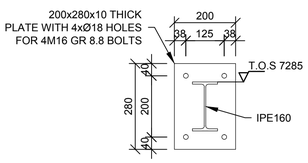

DETAIL 3
SCALE 1:10

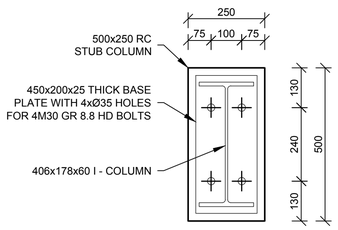

SECTION B
SCALE 1:10

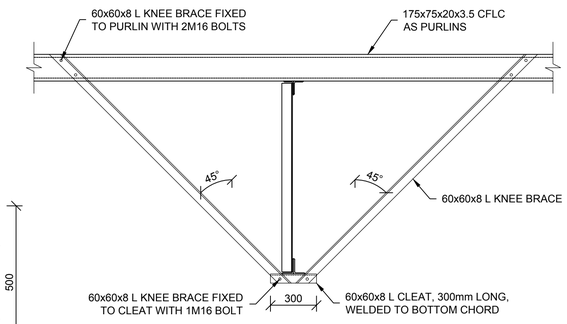

TYPICAL KNEE BRACE

SECTION C
SCALE 1:20

SCALE FOR REDUCED PLAN
0 10 20 30 40 50
50mm ON ORIGINAL DRAWING

NOTES

REFER TO STRUCTURAL GENERAL NOTES
EA-MZ-CI0000-WOR-B18-00001-01

REFER TO ARCHITECTS DRAWING
EA-MZ-CI0100-WOR-E04-00601-01

REFER TO FOUNDATION AND SURFACE BED LAYOUT DRAWING
EA-MZ-CI0100-WOR-E05-00017-01

REFER TO ROOF LAYOUT DRAWING
EA-MZ-CI0100-WOR-E05-00018-01

REFER TO REINFORCEMENT DRAWING
EA-MZ-CI0100-WOR-E05-00020-01

ISSUED FOR CONSTRUCTION

WorleyParsons RSA retains the copyright in all intellectual property, including designs and/or documents prepared in terms of this appointment for the project covered by the appointment. The client may use the designs and/or documents for the sole purpose of their intended use on this project only subject to payment for the design having been received. Use for any other purpose, whether or not the design and/or documents have been paid for constitutes an infringement of copyright, and all rights are reserved.

All dimensions must be verified on site before the works commence. Refer any discrepancies to the Engineer.

Copyright reserved

REVISIONS

NO.	DATE	CHECKED	DONE BY	DESCRIPTION
A	06/10/15	TS	NR	ISSUED FOR INTERNAL REVIEW
B	07/10/15	TS	NR	ISSUED FOR DETAIL DESIGN
C	07/10/15	TS	NR	ISSUED FOR SQUAD CHECK
D	09/10/15	TS	NR	ISSUED FOR CLIENT REVIEW
E	17/11/15	TS	NR	ISSUED FOR CLIENT APPROVAL
0	03/12/15	TS	NR	ISSUED FOR CONSTRUCTION

WorleyParsons
resources & energy
39 MELROSE BOULEVARD, MELROSE ARCH, JOHANNESBURG
P.O. Box 61232, MARSHALLTOWN, 2107
TEL: +27 (0)11 218 3000
FAX: +27(0)11 218 3100
www.worleyparsons.com
WorleyParsons RSA (Pty) Ltd.

	NAME	SIGNATURE	DATE
DRAWN BY:	N ROBINSON		03/12/15
CHECKED :	T SNYDERS		03/12/15
DESIGNER :	T SNYDERS		03/12/15
PR ENG :	I ROBINSON		03/12/15
PROJECT ENG MANAGER	L PADAYACHEE		03/12/15
LOCAL PR ENG :			
CLIENT:			

CLIENT

MOZAMBIQUE GAS DEVELOPMENT PROJECT

Anadarko Moçambique Área 1, Lda

PROJECT
AMA 1 RESETTLEMENT VILLAGE

DRAWING DESCRIPTION
PRIMARY SCHOOL SPORTS FIELD ROOF SECTIONS & DETAILS

SCALE	DATE
AS SHOWN (ORIGINAL DWG SIZE A1)	DEC 2015

DRAWING NUMBER	REV NO
C00290-00-ST-DAL-0049-001	0

ANADARKO DRAWING NUMBER
EA-MZ-CI0100-WOR-E05-00019-01

16. PUBLIC TOILET

SMALL POWER LEGEND

- SINGLE SOCKET OUTLET
- DOUBLE SOCKET OUTLET
- VOIP DATA POINT
- TV POINT
- POWER POLE WITH 2 X DOUBLE SOCKET OUTLET.
- LIGHT SWITCH
- 2-WAY LIGHT SWITCH
- DISTRIBUTION BOARD
- DOUBLE POLE ISOLATOR
- 6U IT CABINET FOR VOIP
- 50mm SLEEVE
- 25mm CONDUIT

LIGHTING LEGEND

- 2 X 26W COMPACT FLUORESCENT FLOOD LIGHT, WITH ECG &COOL WHITE LAMPS. THE LUMINAIRES WILL BE SUITABLE FOR WALL &/OR POLE MOUNTING COMPLETE WITH 4M POLE WHERE REQUIRED. (THE POLE AND THE LIGHT FITTING WILL BE EQUAL OR BETTER APPROVED THAN PS76MS "POLE"AND LS122 "LIGHT" FROM RADIANT)
- (B) 2 X 26W COMPACT FLUORESCENT RECESSED DOWN LIGHT, WITH ECG, HORIZONTALLY MOUNTED COOL WHITE LAMPS & 3M 3CORE 1MM² CABTYRE AND 6A PLUGTOP. THE FITTING WILL BE EQUAL OR BETTER THAN RADIANT TYPE BB74
- (O) 1X26W COMPACT FLUORESCENT WALL/CEILING MOUNTED DECORATIVE BULKHEAD LUMINAIRE WITH CAST ALUMINIUM BODY, COOL WHITE LAMP & ECG (EQUAL OR BETTER THAN RADIANT TYPE WT6E)
- (D) 1 X 36W OPEN FLUORESCENT LUMINAIRE WITH ECG. (EQUAL OR BETTER THAN LASCON TYPE RI/T-136-ELB)
- (D1) 1 X 36W WEATHER PROOF TO IP 55 FLUORESCENT LUMINAIRE WITH TRIPHOSPHOR LAMPS AND ECG
- (E) 2 X 36W OPEN FLUORESCENT LUMINAIRE WITH ECG. (EQUAL OR BETTER THAN LASCON TYPE RI/T-236-ELB)
- (E1) 2 X 36W WEATHER PROOF TO IP 55 FLUORESCENT LUMINAIRE WITH TRIPHOSPHOR LAMPS AND ECG
- (F) 1x18W COMPACT FLUORESCENT CEILING MOUNTED LUMINARIES WITH COOL WHITE LAMPS & ECG (EQUAL OR BETTER THAN RADIANT TYPE JL25)
- G EQUAL OR BETTER THAN RADIANT TYPE LS896 WITH A 70W MH LAMP MOUNTED ON A 4M GALVANIZED STEEL POLE.
- ONE LEVER LIGHT SWITCH
- TWO LEVER LIGHT SWITCH
- THREE LEVER LIGHT SWITCH
- 2W 2-WAY LIGHT SWITCH
- DISTRIBUTION BOARD LOCATION
- DOUBLE POLE ISOLATOR
- PC PHOTOCELL

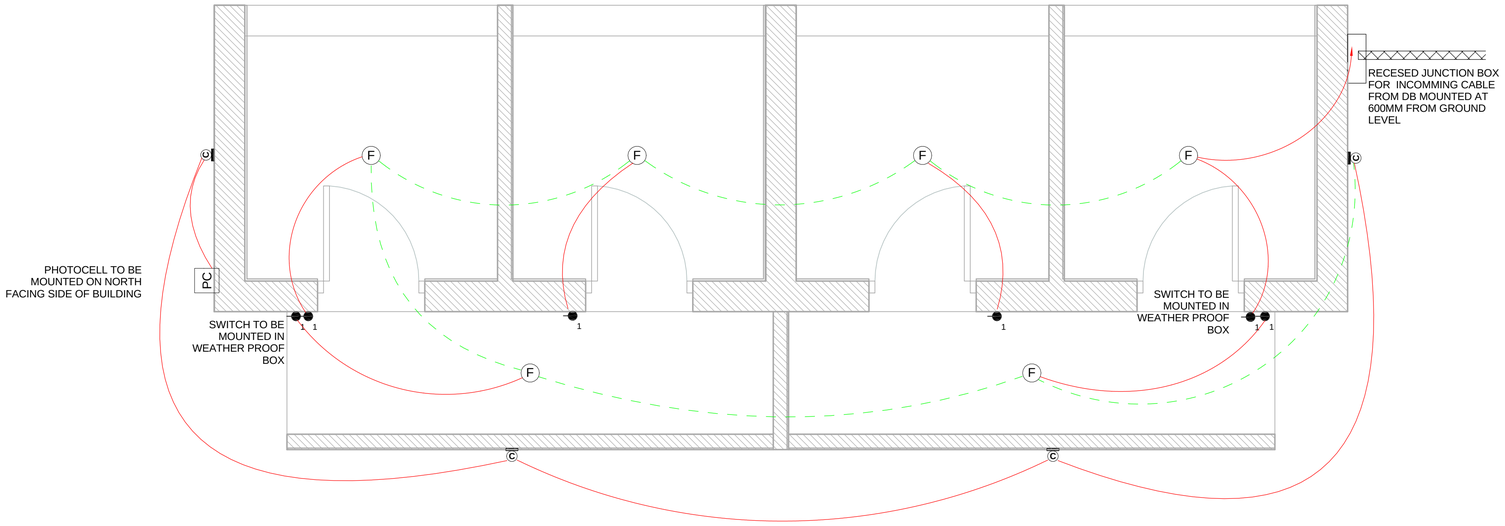

1 Lighting Layout - Public Toilets
1 : 20

CONDUCTOR LEGEND

1. 2.5mm2 CONDUCTORS SHALL BE USED FOR ALL LIGHTING CIRCUITS
2. 4mm2 CONDUCTORS SHALL BE USED FOR ALL SOCKET OUTLET CIRCUITS
3. 6mm2 CONDUCTORS SHALL BE USED FOR ALL GEYSER AND STOVE CIRCUITS
4. ALL 3 CORE CABLES SHALL CONSIST OF 1 LIVE PHASE CONDUCTOR, 1 NEUTRAL CONDUCTOR AND A PROTECTED EARTH CONDUCTOR
5. ALL 4 CORE CABLES SHALL CONSIST OF 3 LIVE PHASE CONDUCTORS AND 1 NEUTRAL CONDUCTOR WITH AN EXTERNAL BARE COPPER EARTH WIRE STRAPPED TO THE CABLE AT 1m INTERVALS

NOTE:
SEE DRAWING C00290-00-EL-DAL-0009, FOR OVERVIEW

SCALE FOR REDUCED PLAN
0 10 20 30 40 50
50mm ON ORIGINAL DRAWING

NOTES

1. ALL CABLES AND WIRES TO BE INSTALLED IN CONDUITS

DRAWING NUMBER	REFERENCE DRAWING DESCRIPTION
C00290-00-EL-DAL-0009 EA-MZ-CI0000-WOR-E02-00007-01	Site Electrical Reticulation – LV (Overview)
C00290-00-EL-DES-0001-002 EA-MZ-CI0000-WOR-E02-00027-02	Typical Drawings Sheet 2

ISSUED FOR CONSTRUCTION

WorleyParsons RSA retains the copyright in all intellectual property, including designs and/or documents prepared in terms of this appointment for the project covered by the appointment. The client may use the designs and/or documents for the sole purpose of their intended use on this project only subject to payment for the design having been received. Use for any other purpose, whether or not the design and/or documents have been paid
for constitutes an infringement of copyright, and all rights are reserved.

All dimensions must be verified on site before the works commence. Refer any discrepancies to the Engineer.

Copyright reserved

REVISIONS

NO.	DATE	CHECKED	DONE BY	DESCRIPTION
A	28/09/15	TM	SB	Issued for Peer Review
B	28/09/15	TM	SB	Issued for Detailed Design
C	02/10/15	TM	SB	Issued for Squad Check
D	16/10/15	TM	CB	Issued for Client Review
E	17/11/15	TM	CB	Issued for Client Approval
0	04/12/15	TM	SB	Issued for Construction

WorleyParsons
resources & energy
39 MELROSE BOULEVARD, MELROSE ARCH, JOHANNESBURG
P.O. Box 61232, MARSHALLTOWN, 2107
TEL: +27 (0)11 218 3000
FAX: +27(0)11 218 3100
www.worleyparsons.com
WorleyParsons RSA (Pty) Ltd.

	NAME	SIGNATURE	DATE
DRAWN BY:	C Brandsen		06/10/15
CHECKED:	T Meyer		02/10/15
DESIGNER:	C Brandsen		28/09/15
PR ENG:	W Snyman 20050166		02/10/15
PROJECT ENG MANAGER:	L Padayachee		02/10/15
LOCAL PR ENG:			
CLIENT:			

CLIENT

MOZAMBIQUE GAS DEVELOPMENT PROJECT

Anadarko Moçambique Área 1, Lda

PROJECT

AMA1 RESETTLEMENT VILLAGE

DRAWING DESCRIPTION

Resettlement Village Public Toilets Lighting Layout

SCALE	DATE
As indicated ORIGINAL DWG SIZE A1	DECEMBER 2015

DRAWING NUMBER	REV NO
C00290-00-EL-DAL-0063	0

ANADARKO DRAWING NUMBER
EA-MZ-CI0100-WOR-E02-00108-01

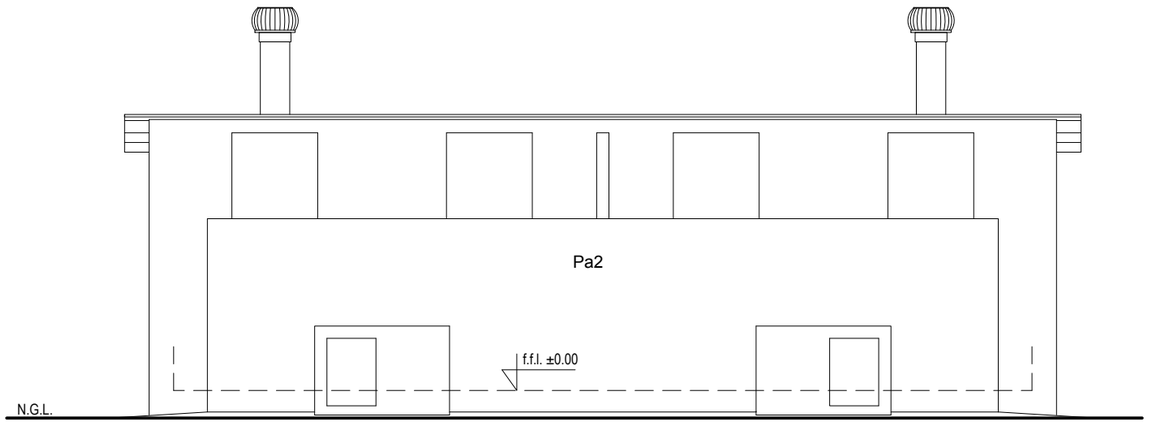

ALÇADO FRONTAL
Front Elevation

ESCALA/Scale 1:50

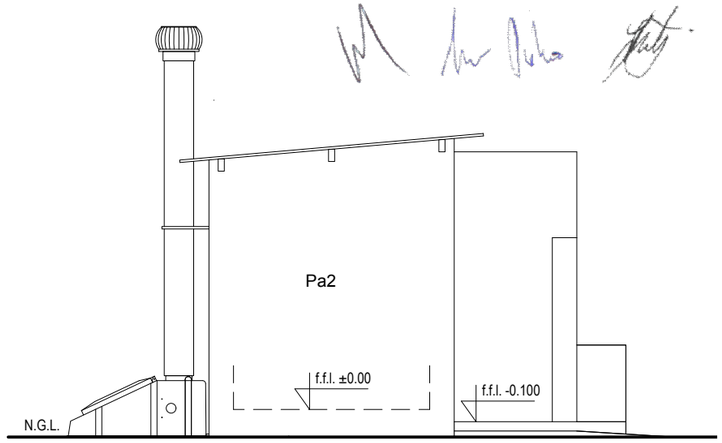

ALÇADO LATERAL
Side Elevation

ESCALA/Scale 1:50

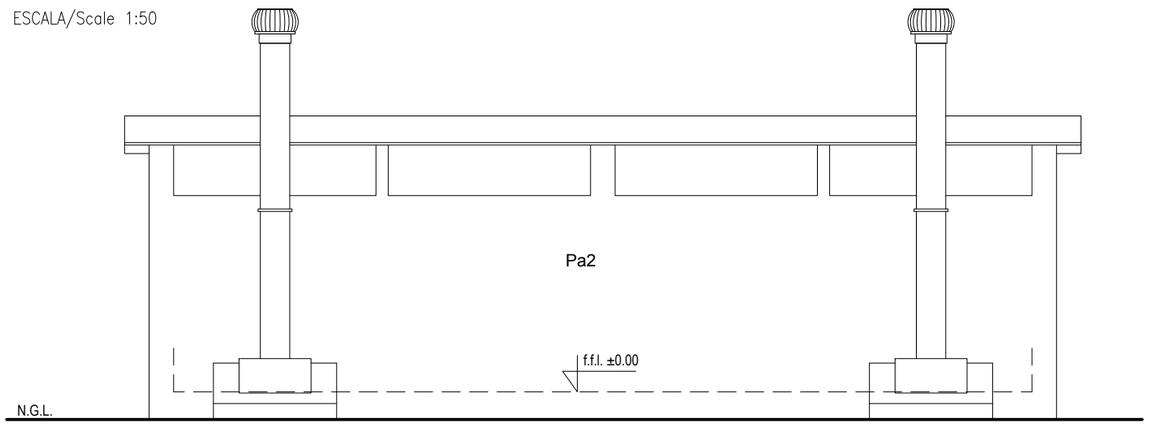

ALÇADO POSTERIOR
Back Side Elevation

ESCALA/Scale 1:50

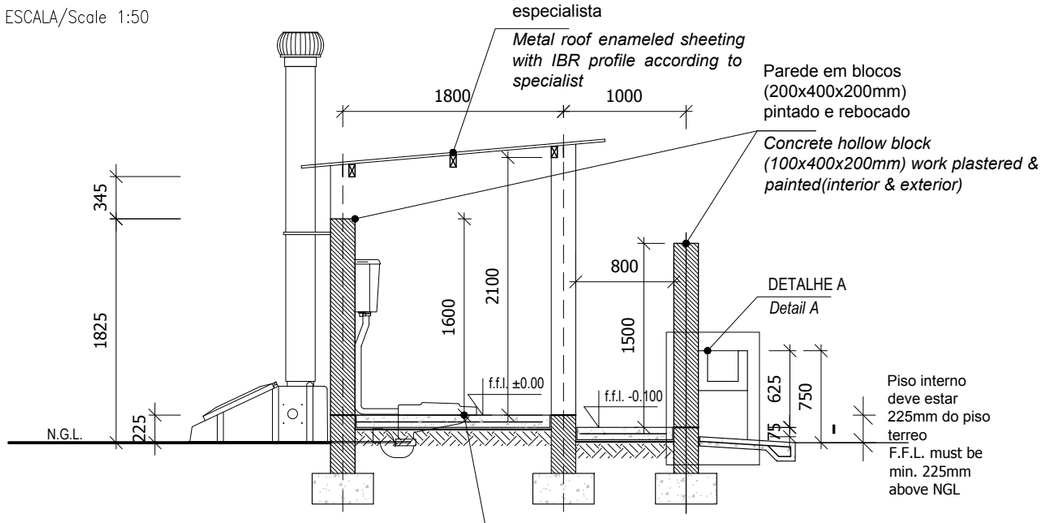

CORTE AA
Section AA

ESCALA/Scale 1:50

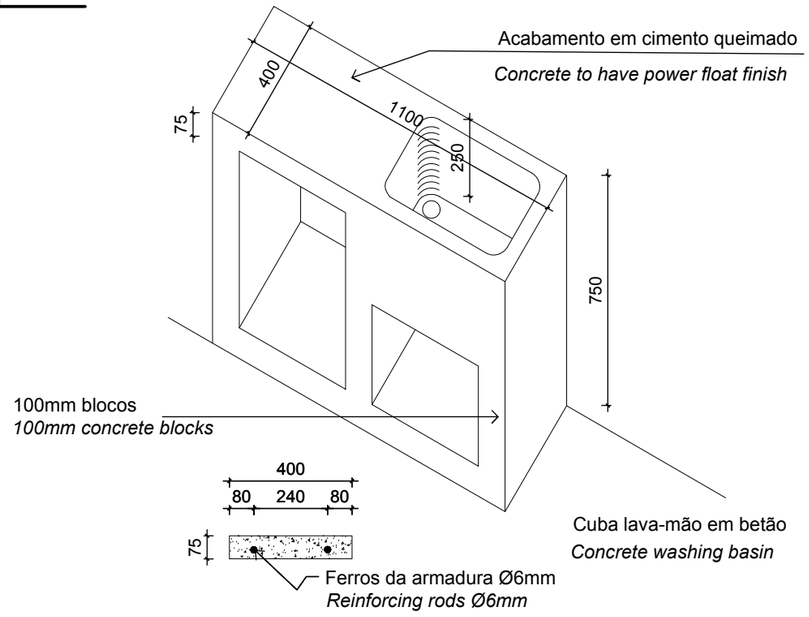

DETALHE A
Detali A

ESCALA/Scale 1:20

ESTE DESENHO É PARA SER LIDO EM CONJUNTO COM:

THIS DRAWING IS TO BE READ IN CONJUCTION WITH:

ARCHITECTURAL
EA-MZ-CI0100-WOR-E04-00901-01
EA-MZ-CI0100-WOR-E05-00900-01
EA-MZ-CI0100-WOR-E05-00043-02
EA-MZ-CI0100-WOR-E04-00026-01

STRUCTURAL
EA-MZ-CI0100-WOR-E05-00016-01

ELECTRICAL
EA-MZ-CI0100-WOR-E02-00108-01

ISSUED FOR CONSTRUCTION

WorleyParsons RSA retains the copyright in all intellectual property, including designs and/or documents prepared in terms of this appointment for the project covered by the appointment. The client may use the designs and/or documents for the sole purpose of their intended use on this project only subject to payment for the design having been received. Use for any other purpose, whether or not the design and/or documents have been paid for constitutes an infringement of copyright, and all rights are reserved.

All dimensions must be verified on site before the works commence. Refer any discrepancies to the Engineer.

Copyright reserved

REVISIONS

NO.	DATE	CHK	DONE BY	DESCRIPTION
A	08/09/15	MM	AP	ISSUED INTERNAL REVIEW
B	08/09/15	MM	AP	ISSUED FOR DETAIL DESIGN
C	08/09/15	MM	AP	ISSUED FOR SQUAD CHECK
D	01/10/15	MM	AP	ISSUED FOR CLIENT REVIEW
E	13/11/15	MM	AP	ISSUED CLIENT APPROVAL
0	25/11/15	MM	AP	ISSUED FOR CONSTRUCTION

WorleyParsons
resources & energy
39 MELROSE BOULEVARD, MELROSE ARCH, JOHANNESBURG
P.O. Box 61232, MARSHALLTOWN, 2107
TEL: +27 (0)11 218 3000
FAX: +27(0)11 218 3100
www.worleyparsons.com
WorleyParsons RSA (Pty) Ltd.

MESCH arquitectos

CLIENT

MOZAMBIQUE GAS DEVELOPMENT PROJECT

Anadarko Moçambique Área 1, Lda

PROJECT
AMA 1
RESETTLEMENT
VILLAGE

DRAWING DESCRIPTION

LATRINAS PÚBLICAS - ALÇADOS & CORTE

TIPICAL PUBLIC TOILET - ELEVATIONS & SECTION

SCALE	DATE
A3@ 1:50	NOV 2015

DRAWING NUMBER:	REV Nº
C00290-00-AR-DSE-0017-001	0

ANADARKO DRAWING NUMBER:
EA-MZ-CI0100-WOR-E05-00900-01

DOOR SCHEDULE/ Mapa de vãos: Portas

ALL DIMENSIONS AND LEVELS ARE TO BE CHECKED/VERIFIED ON SITE AND ANY DISCREPENCIES ARE TO BE REPORTED TO THE ARCHITECT
TODAS DIMENSÕES E NÍVEIS DEVEM SER VERIFICADOS NA OBRA E QUALQUER DISCREPÂNCIA DEVERÁ SER COMUNICADA AO ARQUITECTO

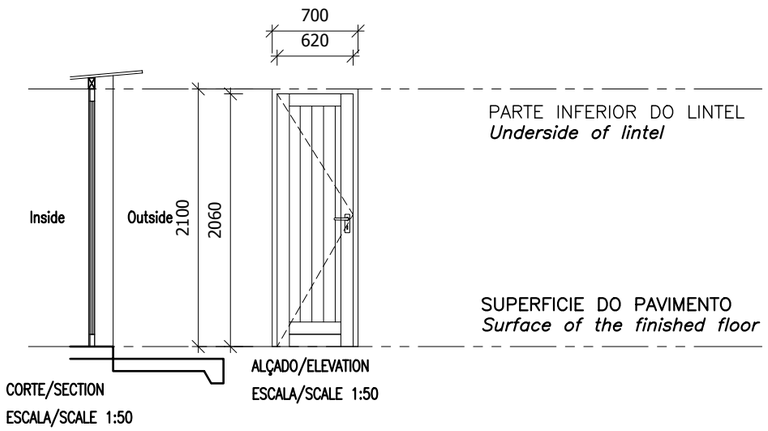

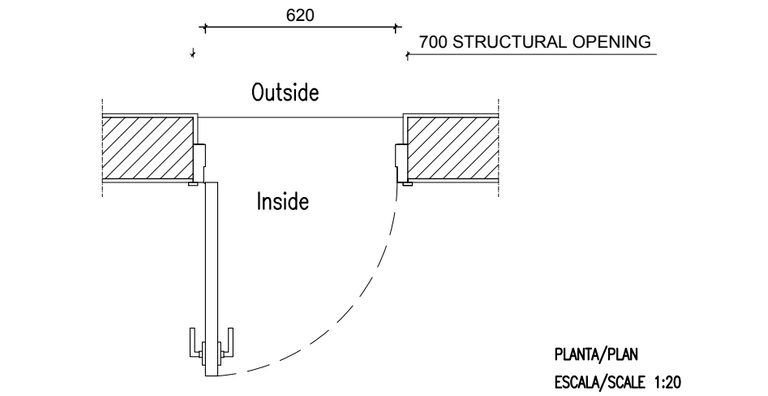

Code: Codigo:	D3	**Position:** Localização:	Toilet Shower	**Qty:** Qtd:	4
Frame: Aro:	WOOD FRAME TO MANUFACTURERS SPECS SEMI SOLID SLATTED TIMBER DOOR DOORS TO BE TYPE PD60 - from SWARTLAND OR SIMILAR				
Finish: Acabamentos:	1 COAT PRIMER 1 COAT UNDERCOAT AND 2 COATS PLASCON ENAMEL DOORS & TRIMS COLOUR "LIGHT BROWN" OR EQUAL & APPROVED				
Ironmongery Ferragens	102 x 75 x 3mm PVD DOUBLE BALL BEARING BUTT HINGE X 3 PER DOOR LOCK (3 LEAVER) WITH HANDLES POLISHED CHROME FINISH SIMILAR TO "UNION" PROTEA CB612 HANDLE				
Glazing: Vidros:					
Glazing Notes:					

NOTES:

1. ALL DOORS WILL BE OF UMBILA OR OF EQUIVALENT WOOD QUALITY & APPROVED BY CLIENT
2. ALL OF THE CASEMENT WINDOWS WILL ALSO TAKE ONE MORE CASEMENT LEAF INSIDE IN MOSQUITO NET
3. ALL OPENINGS SIZE TO BE CONFIRMED ON SITE BEFORE MANUFACTURING
4. SHOP DRAWINGS TO BE APPROVED BY ARCHITECT BEFORE MANUFACTURING
5. REFER TO WINDOW & DOOR SCHEDULE KEY PLAN

ESTE DESENHO É PARA SER LIDO EM CONJUNTO COM:

THIS DRAWING IS TO BE READ IN CONJUCTION WITH:

ARCHITECTURAL
EA-MZ-CI0100-WOR-E04-00901-01
EA-MZ-CI0100-WOR-E05-00900-01
EA-MZ-CI0100-WOR-E05-00043-02
EA-MZ-CI0100-WOR-E04-00026-01

STRUCTURAL
EA-MZ-CI0100-WOR-E05-00016-01

ELECTRICAL
EA-MZ-CI0100-WOR-E02-00108-01

ISSUED FOR CONSTRUCTION

WorleyParsons RSA retains the copyright in all intellectual property, including designs and/or documents prepared in terms of this appointment for the project covered by the appointment. The client may use the designs and/or documents for the sole purpose of their intended use on this project only subject to payment for the design having been received. Use for any other purpose, whether or not the design and/or documents have been paid for constitutes an infringement of copyright, and all rights are reserved.

All dimensions must be verified on site before the works commence. Refer any discrepancies to the Engineer.

Copyright reserved

REVISIONS

NO.	DATE	CHK	DONE BY	DESCRIPTION
A	08/09/15	MM	AP	ISSUED INTERNAL REVIEW
B	08/09/15	MM	AP	ISSUED FOR DETAIL DESIGN
C	08/09/15	MM	AP	ISSUED FOR SQUAD CHECK
D	01/10/15	MM	AP	ISSUED FOR CLIENT REVIEW
E	13/11/15	MM	AP	ISSUED CLIENT APPROVAL
0	25/11/15	MM	AP	ISSUED FOR CONSTRUCTION

WorleyParsons
resources & energy
39 MELROSE BOULEVARD, MELROSE ARCH, JOHANNESBURG
P.O. Box 61232, MARSHALLTOWN, 2107
TEL: +27 (0)11 218 3000
FAX: +27(0)11 218 3100
www.worleyparsons.com
WorleyParsons RSA (Pty) Ltd.

MESCH arquitectos

CLIENT

MOZAMBIQUE GAS DEVELOPMENT PROJECT

Anadarko Moçambique Área 1, Lda

PROJECT
AMA 1
RESETTLEMENT
VILLAGE

DRAWING DESCRIPTION
LATRINAS PÚBLICAS - MAPA DE VÃOS

TIPICAL PUBLIC TOILET - DOOR SCHEDULE

SCALE	DATE
A3@ 1:50	NOV 2015

DRAWING NUMBER:	REV Nº
C00290-00-AR-SCH-0003	0

ANADARKO DRAWING NUMBER:
EA-MZ-CI0100-WOR-E05-00043-02

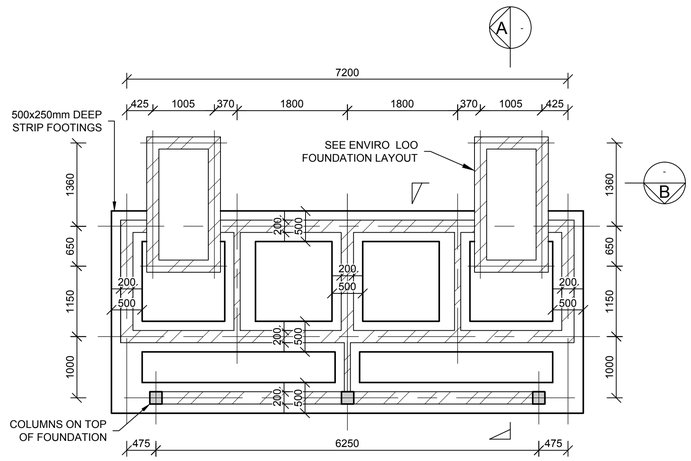

LATRINES FOUNDATION LAYOUT

SCALE: 1:50

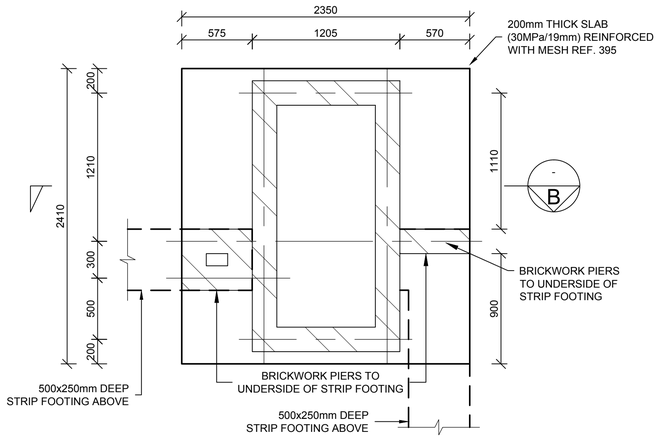

ENVIRO LOO FOUNDATION LAYOUT

SCALE: 1:25

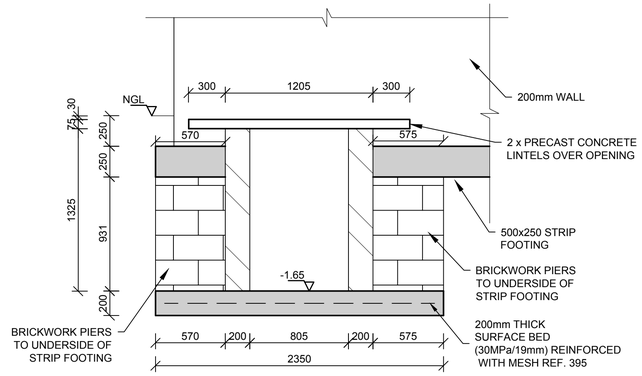

SECTION B

SCALE 1: 25

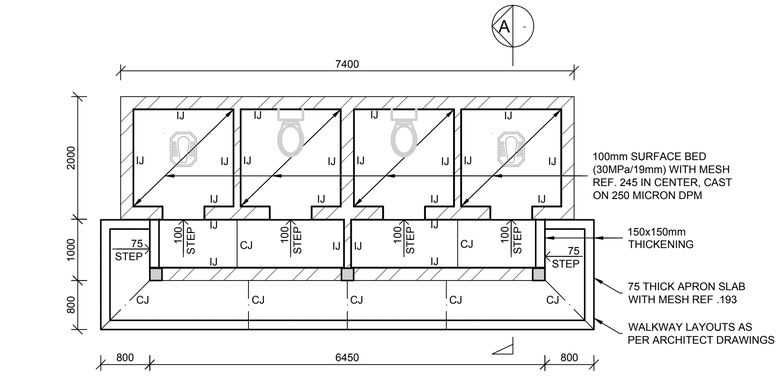

LATRINES SURFACE BED LAYOUT

SCALE: 1:50

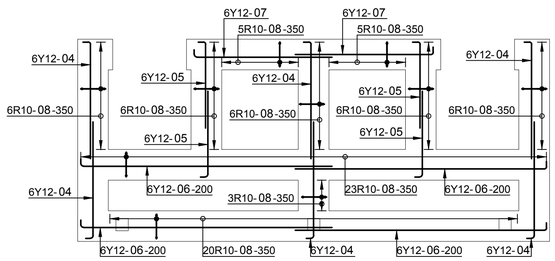

LATRINES FOUNDATION REINFORCEMENT

SCALE: 1:50

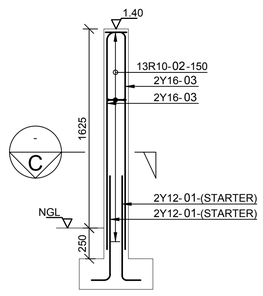

TYPICAL COLUMN REINFORCEMENT

SCALE 1 : 25

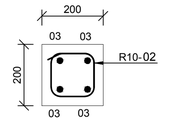

SECTION C

SCALE 1: 10

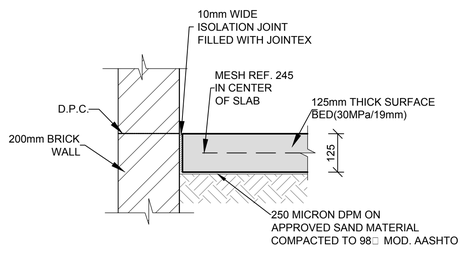

ISOLATION JOINT (I.J.)

SCALE 1:10

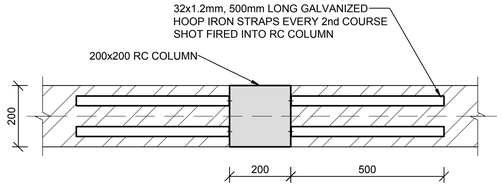

TYPICAL HOOP IRON JOINT

SCALE 1:10

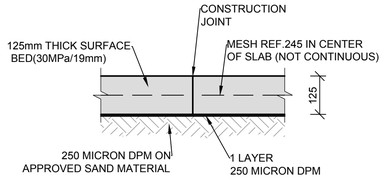

TYPICAL CONSTRUCTION JOINT (C.J.)

SCALE 1:10

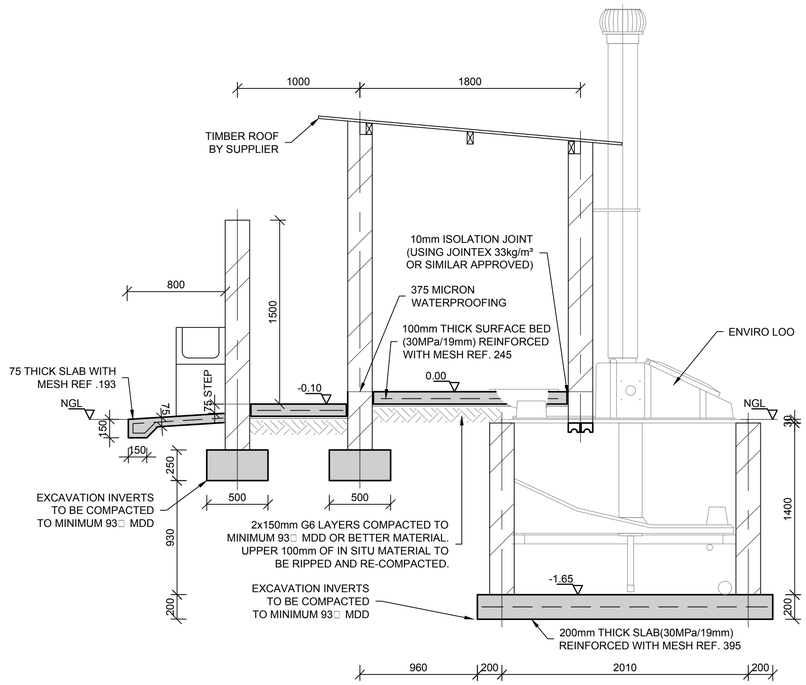

SECTION A

SCALE 1: 25

SCALE FOR REDUCED PLAN
0 10 20 30 40 50
50mm ON ORIGINAL DRAWING

NOTES

REFER TO STRUCTURAL GENERAL NOTES
EA-MZ-CI0000-WOR-B18-00001-01

REFER TO ARCHITECTS DRAWING
EA-MZ-CI0100-WOR-E04-00901-01

REFER TO BENDING SCHEDULE 24
ON DRAWING EA-MZ-CI0100-WOR-E05-00063-01

ISSUED FOR CONSTRUCTION

WorleyParsons RSA retains the copyright in all intellectual property, including designs and/or documents prepared in terms of this appointment for the project covered by the appointment. The client may use the designs and/or documents for the sole purpose of their intended use on this project only subject to payment for the design having been received. Use for any other purpose, whether or not the design and/or documents have been paid for constitutes an infringement of copyright, and all rights are reserved.

All dimensions must be verified on site before the works commence. Refer any discrepancies to the Engineer.

Copyright reserved

REVISIONS

NO.	DATE	CHECKED	DONE BY	DESCRIPTION
A	01/10/15	TS	NR	ISSUED FOR INTERNAL REVIEW
B	01/10/15	TS	NR	ISSUED FOR DETAIL DESIGN
C	01/10/15	TS	NR	ISSUED FOR SQUAD CHECK
D	06/10/15	TS	NR	ISSUED FOR CLIENT REVIEW
E	17/11/15	TS	NR	ISSUED FOR CLIENT APPROVAL
0	03/12/15	TS	NR	ISSUED FOR CONSTRUCTION

WorleyParsons
resources & energy
39 MELROSE BOULEVARD, MELROSE ARCH, JOHANNESBURG
P.O. Box 61232, MARSHALLTOWN, 2107
TEL: +27 (0)11 218 3000
FAX: +27(0)11 218 3100
www.worleyparsons.com
WorleyParsons RSA (Pty) Ltd.

	NAME	SIGNATURE	DATE
DRAWN BY:	N ROBINSON		03/12/15
CHECKED :	T SNYDERS		03/12/15
DESIGNER :	T SNYDERS		03/12/15
PR ENG :	I ROBINSON		03/12/15
PROJECT ENG MANAGER	L PADAYACHEE		03/12/15
LOCAL PR ENG :			
CLIENT:			

CLIENT

MOZAMBIQUE GAS DEVELOPMENT PROJECT

Anadarko
Moçambique Área 1, Lda

PROJECT
AMA 1 RESETTLEMENT VILLAGE

DRAWING DESCRIPTION

PUBLIC LATRINES LAYOUT

SCALE	DATE
AS SHOWN (ORIGINAL DWG SIZE A1)	DEC 2015

DRAWING NUMBER	REV NO
C00290-00-ST-DAL-0046-001	0

ANADARKO DRAWING NUMBER
EA-MZ-CI0100-WOR-E05-00016-01

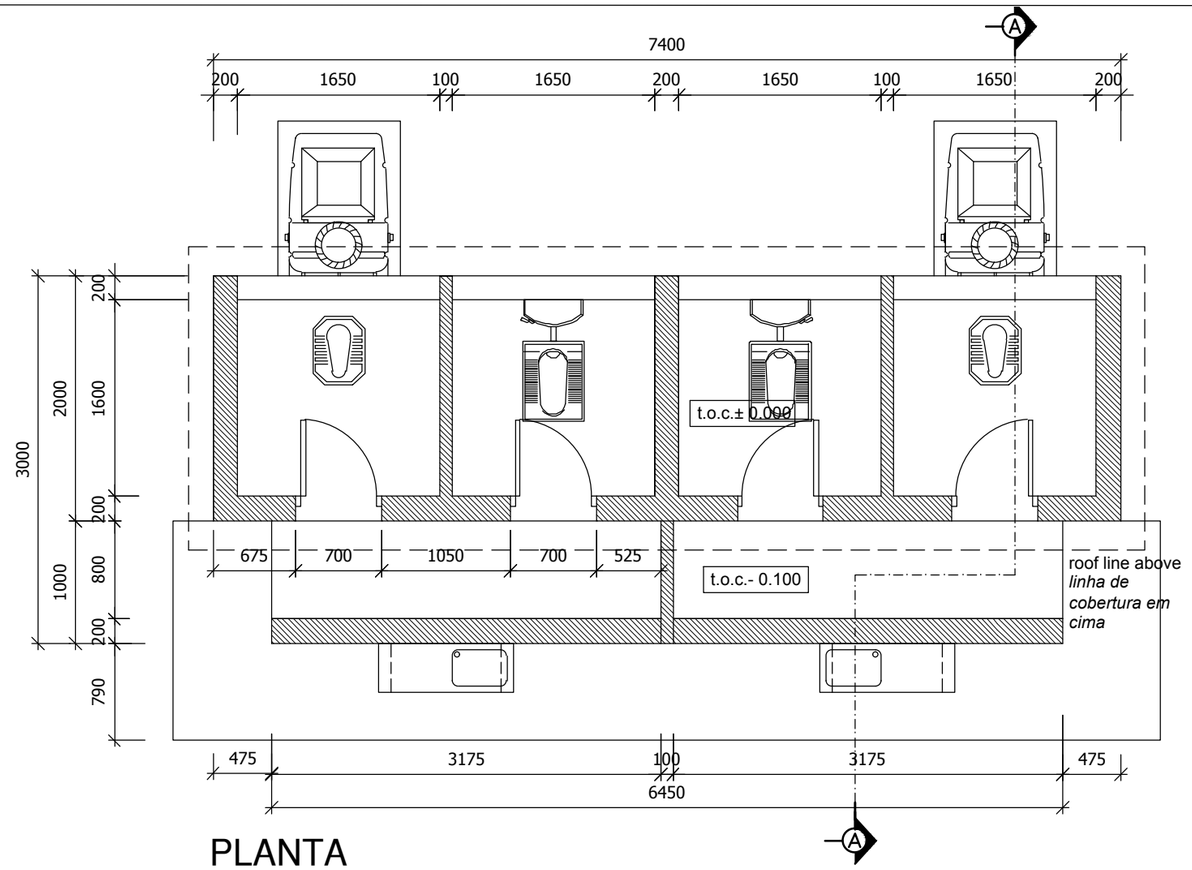

PLANTA
Floor Plan

ESCALA/Scale 1:50

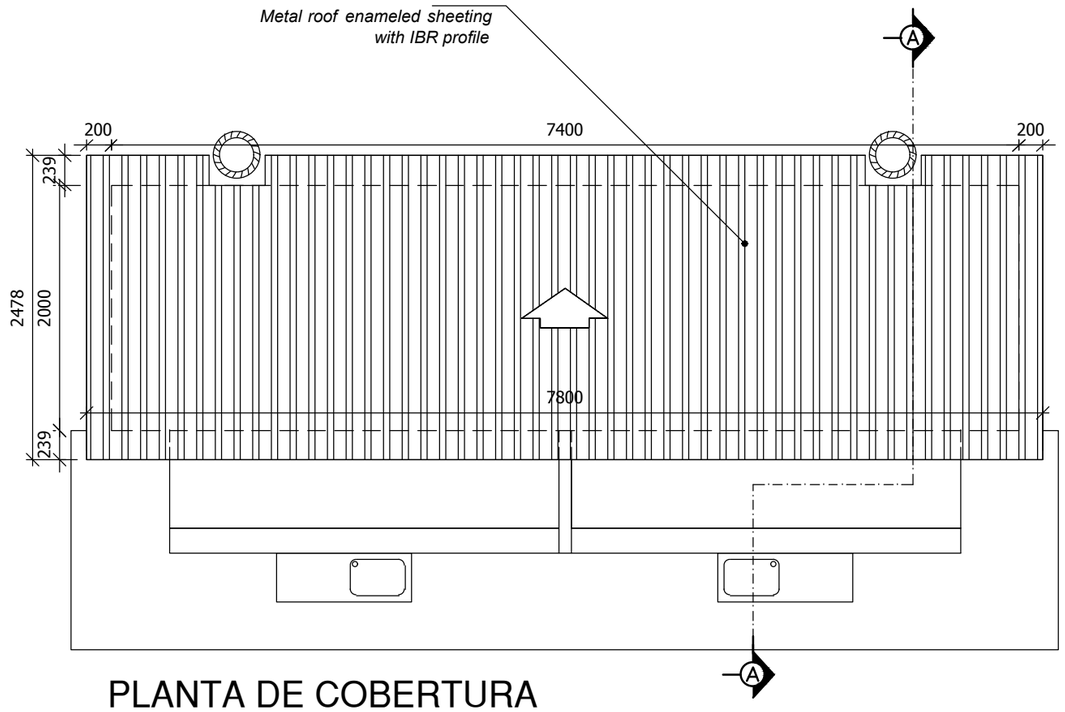

PLANTA DE COBERTURA
Roof Plan

ESCALA/Scale 1:50

ESTE DESENHO É PARA SER LIDO EM CONJUNTO COM:

THIS DRAWING IS TO BE READ IN CONJUCTION WITH:

ARCHITECTURAL
EA-MZ-CI0100-WOR-E04-00901-01
EA-MZ-CI0100-WOR-E05-00900-01
EA-MZ-CI0100-WOR-E05-00043-02
EA-MZ-CI0100-WOR-E04-00026-01

STRUCTURAL
EA-MZ-CI0100-WOR-E05-00016-01

ELECTRICAL
EA-MZ-CI0100-WOR-E02-00108-01

ISSUED FOR CONSTRUCTION

WorleyParsons RSA retains the copyright in all intellectual property, including designs and/or documents prepared in terms of this appointment for the project covered by the appointment. The client may use the designs and/or documents for the sole purpose of their intended use on this project only subject to payment for the design having been received. Use for any other purpose, whether or not the design and/or documents have been paid for constitutes an infringement of copyright, and all rights are reserved.

All dimensions must be verified on site before the works commence. Refer any discrepancies to the Engineer.

Copyright reserved

REVISIONS

NO.	DATE	CHK	DONE BY	DESCRIPTION
A	08/09/15	MM	AP	ISSUED INTERNAL REVIEW
B	08/09/15	MM	AP	ISSUED FOR DETAIL DESIGN
C	08/09/15	MM	AP	ISSUED FOR SQUAD CHECK
D	01/10/15	MM	AP	ISSUED FOR CLIENT REVIEW
E	13/11/15	MM	AP	ISSUED CLIENT APPROVAL
0	25/11/15	MM	AP	ISSUED FOR CONSTRUCTION

WorleyParsons
resources & energy
39 MELROSE BOULEVARD, MELROSE ARCH, JOHANNESBURG
P.O. Box 61232, MARSHALLTOWN, 2107
TEL: +27 (0)11 218 3000
FAX: +27(0)11 218 3100
www.worleyparsons.com
WorleyParsons RSA (Pty) Ltd.

MESCH arquitectos

CLIENT

MOZAMBIQUE GAS DEVELOPMENT PROJECT

Anadarko Moçambique Área 1, Lda

PROJECT
AMA 1
RESETTLEMENT
VILLAGE

DRAWING DESCRIPTION

LATRINAS PÚBLICAS - PLANTA DE PISO E COBERTURA

TIPICAL PUBLIC TOILET - FLOOR & ROOF PLAN

SCALE	DATE
A3@ 1:50	NOV 2015

DRAWING NUMBER:	REV Nº
C00290-00-AR-DLP-0138-001	0

ANADARKO DRAWING NUMBER:
EA-MZ-CI0100-WOR-E04-00901-01

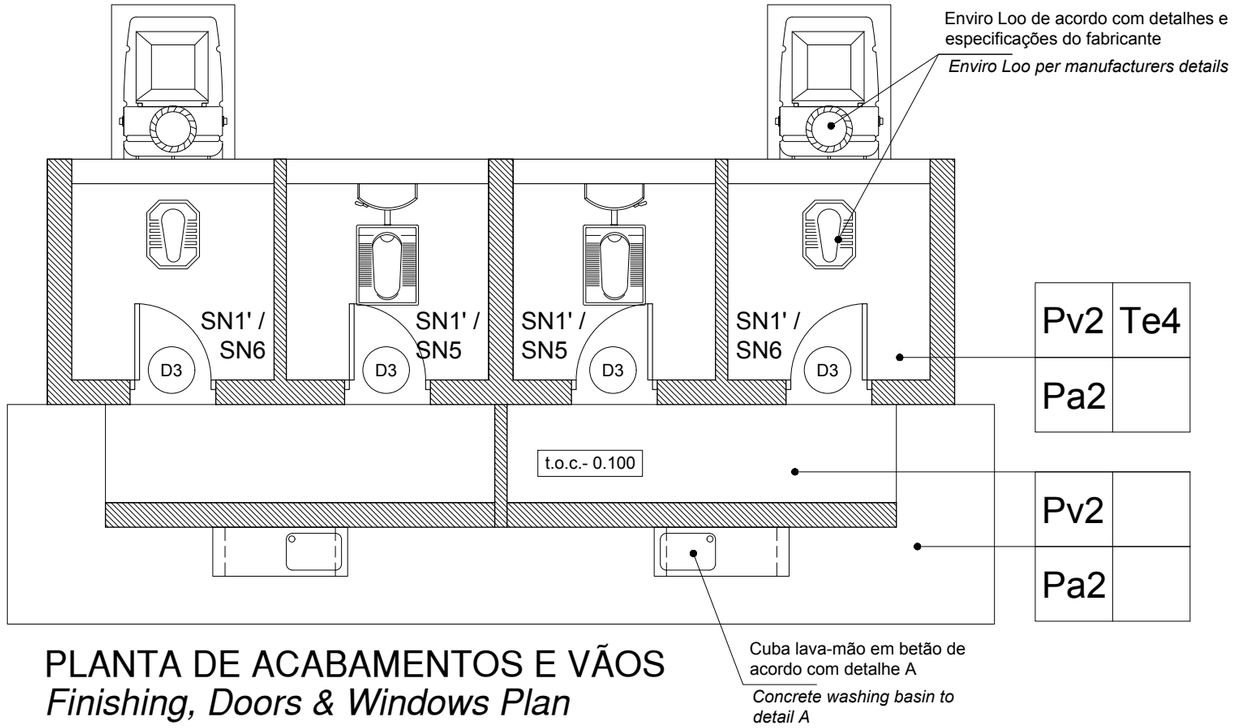

PLANTA DE ACABAMENTOS E VÃOS
Finishing, Doors & Windows Plan

ESCALA/Scale 1:50

ACABAMENTOS / *Finishings*

PAVIMENTOS / *Pavements*

Pv2 -Acabamento do pavimento em cimento queimado
Concrete floor to have power float finish

TECTOS / *Ceilings*

Te4 - Chapa metálica IBR com estrutura de madeira tratada a vista
IBR metalic sheets with visible wooden treated structure

COBERTURA / *Roofs*

Co1 -Chapas metálicas esmaltadas com perfil IBR
Metallic enameled sheets with IBR profile

PAREDES / *Walls*

Pa2 - Pintura com tinta esmalte de cor até 1.50m de altura (lambril) e tinta plástica sobre reboco liso até o tecto
Colour enamel paint until 1.50m height wainscoting PVA paint on plain plaster to ceiling height

SANITÁRIOS / *Sanitary*

SN1` - Porta rolos em porcelana
Toilet rolls holder in porcelain
SN5 - Conjunto de sanita turca em porcelana, modelo "VAAL ORIENTAL SQUAT PAN code 502300" ou similar
Squat pan in pocelain, model "VAAL ORIENTAL SQUAT PAN code 502300 or similar
SN6 - Sistema de latrina tipo "ENVIRO LOO" de acordo com especificações do fabricante
"ENVIRO LOO" system acording to manufactorers details

PINTURA / *Painting*

- Para especificações da pintura consultar documento em anexo.
- For all painting specifications refer to document in annex.
EA-MZ-CI0000-WOR-E04-00031-01

ESTE DESENHO É PARA SER LIDO EM CONJUNTO COM:

THIS DRAWING IS TO BE READ IN CONJUCTION WITH:

ARCHITECTURAL
EA-MZ-CI0100-WOR-E04-00901-01
EA-MZ-CI0100-WOR-E05-00900-01
EA-MZ-CI0100-WOR-E05-00043-02
EA-MZ-CI0100-WOR-E04-00026-01

STRUCTURAL
EA-MZ-CI0100-WOR-E05-00016-01

ELECTRICAL
EA-MZ-CI0100-WOR-E02-00108-01

ISSUED FOR CONSTRUCTION

WorleyParsons RSA retains the copyright in all intellectual property, including designs and/or documents prepared in terms of this appointment for the project covered by the appointment. The client may use the designs and/or documents for the sole purpose of their intended use on this project only subject to payment for the design having been received. Use for any other purpose, whether or not the design and/or documents have been paid for constitutes an infringement of copyright, and all rights are reserved.

All dimensions must be verified on site before the works commence. Refer any discrepancies to the Engineer.

Copyright reserved

REVISIONS

NO.	DATE	CHK	DONE BY	DESCRIPTION
A	08/09/15	MM	AP	ISSUED INTERNAL REVIEW
B	08/09/15	MM	AP	ISSUED FOR DETAIL DESIGN
C	08/09/15	MM	AP	ISSUED FOR SQUAD CHECK
D	01/10/15	MM	AP	ISSUED FOR CLIENT REVIEW
E	13/11/15	MM	AP	ISSUED CLIENT APPROVAL
0	25/11/15	MM	AP	ISSUED FOR CONSTRUCTION

WorleyParsons
resources & energy
39 MELROSE BOULEVARD, MELROSE ARCH, JOHANNESBURG
P.O. Box 61232, MARSHALLTOWN, 2107
TEL: +27 (0)11 218 3000
FAX: +27(0)11 218 3100
www.worleyparsons.com
WorleyParsons RSA (Pty) Ltd.

MESCH arquitectos

CLIENT

MOZAMBIQUE GAS DEVELOPMENT PROJECT

Anadarko Moçambique Área 1, Lda

PROJECT
AMA 1
RESETTLEMENT
VILLAGE

DRAWING DESCRIPTION
LATRINAS PÚBLICAS - PLANTA DE ACABAMENTOS. E VÃOS

TIPICAL PUBLIC TOILET - FINISHING AND W/D KEY PLAN

SCALE	DATE
A3@ 1:50	NOV 2015

DRAWING NUMBER:	REV Nº
C00290-00-AR-DKP-0002-001	0

ANADARKO DRAWING NUMBER:
EA-MZ-CI0100-WOR-E04-00026-01

17. REPLACEMENT HOUSE

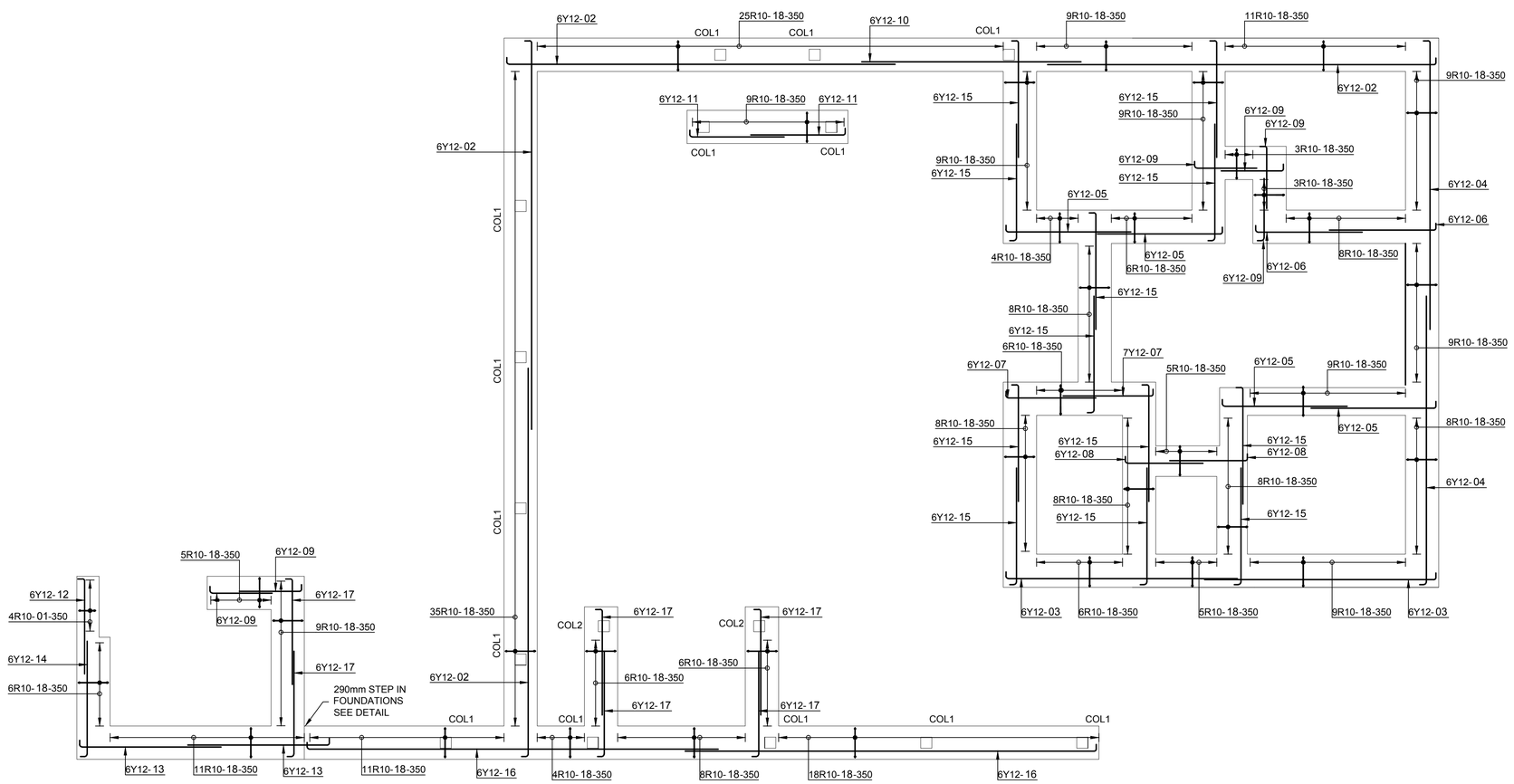

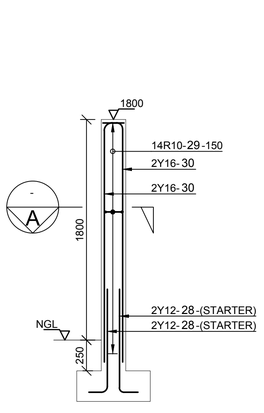

TYPICAL COLUMN 1
REINFORCEMENT
SCALE 1 : 25

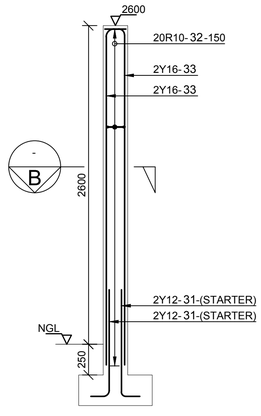

TYPICAL COLUMN 2
REINFORCEMENT
SCALE 1 : 25

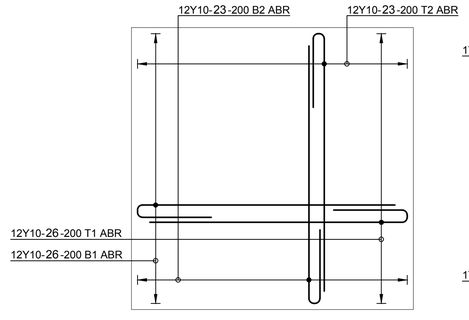

RAINWATER TANK
BASE REINFORCEMENT
SCALE 1 : 25

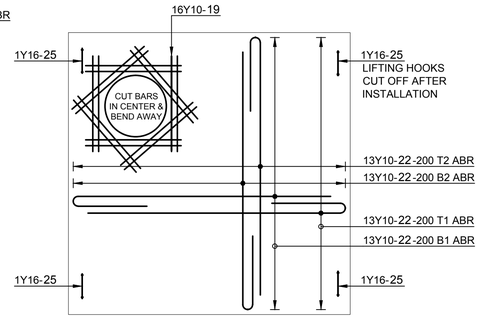

RAINWATER TANK
TOP SLAB REINFORCEMENT
SCALE 1 : 25

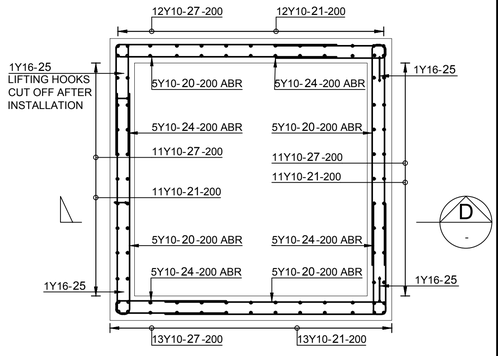

SECTION E
SCALE 1: 25

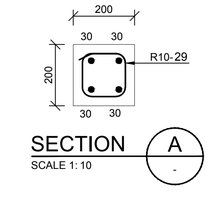

SECTION A
SCALE 1: 10

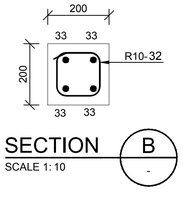

SECTION B
SCALE 1: 10

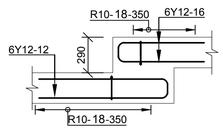

TYPICAL 290 STEP IN
FOUNDATION
SCALE 1 : 25

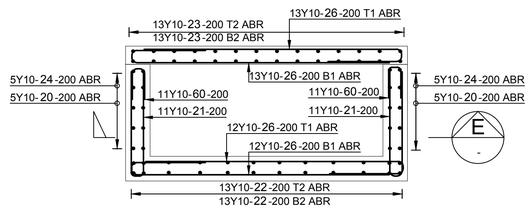

SECTION D
SCALE 1: 25



LIFTING HOOK
DETAIL
SCALE 1:25

SCALE FOR REDUCED PLAN
0 10 20 30 40 50
50mm ON ORIGINAL DRAWING

NOTES

REFER TO STRUCTURAL GENERAL NOTES DRAWING
EA-MZ-CI0000-WOR-B18-00001-01

REFER TO ARCHITECTS DRAWING
EA-MZ-CI0100-WOR-E04-01604-01

REFER TO FOUNDATION LAYOUT DRAWING
EA-MZ-CI0100-WOR-E04-00001-01

REFER TO SURFACE BED AND RING BEAM
EA-MZ-CI0100-WOR-E04-00002-01

REFER TO BENDING SCHEDULE 23
ON DRAWING EA-MZ-CI0100-WOR-E05-00063-01

ISSUED FOR CONSTRUCTION

WorleyParsons RSA retains the copyright in all intellectual property, including designs and/or documents prepared in terms of this appointment for the project covered by the appointment. The client may use the designs and/or documents for the sole purpose of their intended use on this project only subject to payment for the design having been received. Use for any other purpose, whether or not the design and/or documents have been paid for constitutes an infringement of copyright, and all rights are reserved.

All dimensions must be verified on site before the works commence. Refer any discrepancies to the Engineer.

Copyright reserved

REVISIONS

NO.	DATE	CHECKED	DONE BY	DESCRIPTION
A	06/10/15	TS	NR	ISSUED FOR INTERNAL REVIEW
B	07/10/15	TS	NR	ISSUED FOR DETAIL DESIGN
C	07/10/15	TS	NR	ISSUED FOR SQUAD CHECK
D	09/10/15	TS	NR	ISSUED FOR CLIENT REVIEW
E	17/11/15	TS	NR	ISSUED FOR CLIENT APPROVAL
0	03/12/15	TS	NR	ISSUED FOR CONSTRUCTION

WorleyParsons
resources & energy
39 MELROSE BOULEVARD, MELROSE ARCH, JOHANNESBURG
P.O. Box 61232, MARSHALLTOWN, 2107
TEL: +27 (0)11 218 3000
FAX: +27(0)11 218 3100
www.worleyparsons.com
WorleyParsons RSA (Pty) Ltd.

	NAME	SIGNATURE	DATE
DRAWN BY:	N ROBINSON		03/12/15
CHECKED :	T SNYDERS		03/12/15
DESIGNER :	T SNYDERS		03/12/15
PR ENG :	I ROBINSON		03/12/15
PROJECT ENG MANAGER	L PADAYACHEE		03/12/15
LOCAL PR ENG :			
CLIENT:			

CLIENT

MOZAMBIQUE GAS DEVELOPMENT PROJECT

Anadarko
Moçambique Área 1, Lda

PROJECT
AMA 1
RESETTLEMENT
VILLAGE

DRAWING DESCRIPTION

RESETTLEMENT
HOUSE TYPE A
REINFORCEMENT

SCALE	DATE
AS SHOWN ORIGINAL DWG SIZE A1	DEC 2015

DRAWING NUMBER	REV NO
C00290-00-ST-DAL-0022-001	0

ANADARKO DRAWING NUMBER
EA-MZ-CI0100-WOR-E05-00010-01

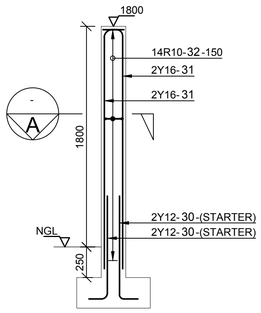

TYPICAL COLUMN 1 REINFORCEMENT

SCALE 1 : 25

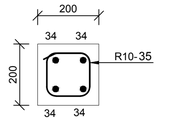

SECTION A

SCALE 1: 10

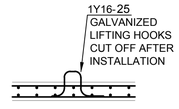

LIFTING HOOK DETAIL

SCALE 1:25

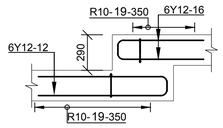

TYPICAL 550 STEP IN FOUNDATION

SCALE 1 : 25

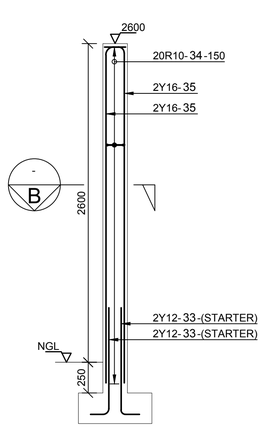

TYPICAL COLUMN 2 REINFORCEMENT

SCALE 1 : 25

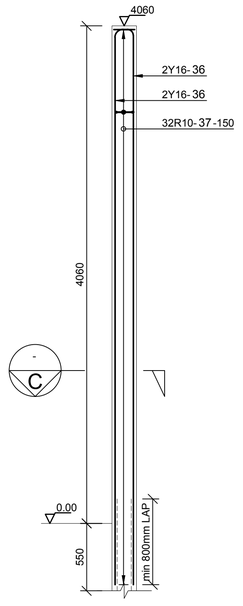

TYPICAL COLUMN 3 REINFORCEMENT

SCALE 1 : 25

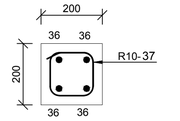

SECTION C

SCALE 1: 10

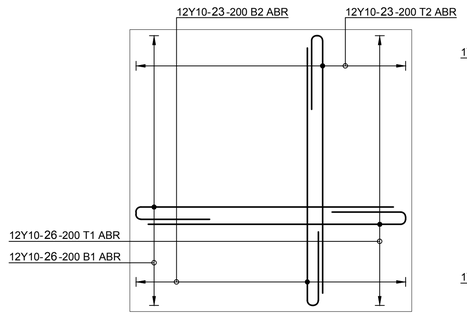

RAINWATER TANK BASE REINFORCEMENT

SCALE 1 : 25

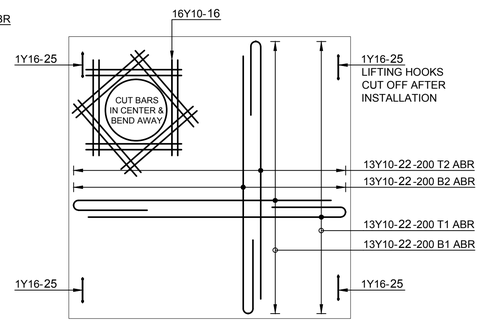

RAINWATER TANK TOP SLAB REINFORCEMENT

SCALE 1 : 25

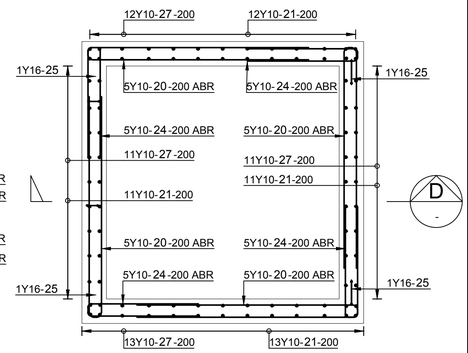

SECTION E

SCALE 1: 25

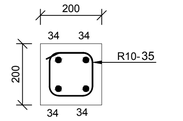

SECTION B

SCALE 1: 10

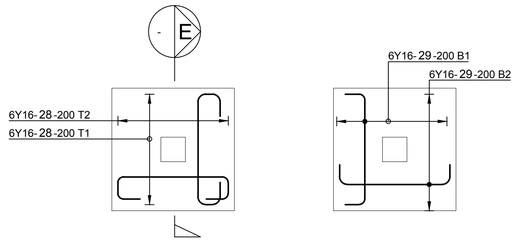

1000x1000 BASE TYPICAL REINFORCEMENT

SCALE 1 : 25

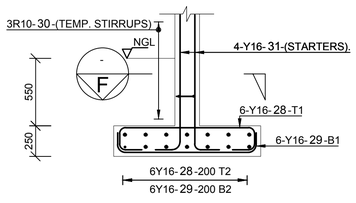

SECTION E

SCALE 1: 25

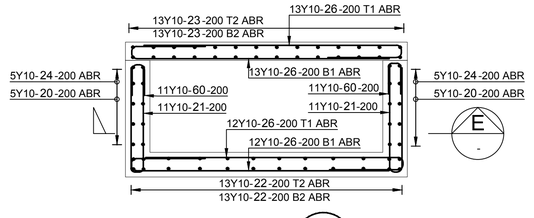

SECTION D

SCALE 1: 25

SCALE FOR REDUCED PLAN
0 10 20 30 40 50
50mm ON ORIGINAL DRAWING

NOTES

REFER TO STRUCTURAL GENERAL NOTES
EA-MZ-CI0000-WOR-B18-00001-01

REFER TO ARCHITECTS DRAWING
EA-MZ-CI0100-WOR-E04-01604-01

REFER TO FOUNDATION LAYOUT DRAWING
EA-MZ-CI0100-WOR-E05-00001-01

REFER TO SURFACE BED AND RING BEAM
EA-MZ-CI0100-WOR-E05-00002-01

REFER TO BENDING SCHEDULE 39 & 40
ON DRAWING EA-MZ-CI0100-WOR-E05-00066-01

ISSUED FOR CONSTRUCTION

WorleyParsons RSA retains the copyright in all intellectual property, including designs and/or documents prepared in terms of this appointment for the project covered by the appointment. The client may use the designs and/or documents for the sole purpose of their intended use on this project only subject to payment for the design having been received. Use for any other purpose, whether or not the design and/or documents have been paid for constitutes an infringement of copyright, and all rights are reserved.

All dimensions must be verified on site before the works commence. Refer any discrepancies to the Engineer.

Copyright reserved

REVISIONS

NO.	DATE	CHECKED	DONE BY	DESCRIPTION
A	06/10/15	TS	NR	ISSUED FOR INTERNAL REVIEW
B	07/10/15	TS	NR	ISSUED FOR DETAIL DESIGN
C	07/10/15	TS	NR	ISSUED FOR SQUAD CHECK
D	09/10/15	TS	NR	ISSUED FOR CLIENT REVIEW
E	17/11/15	TS	NR	ISSUED FOR CLIENT APPROVAL
0	03/12/15	TS	NR	ISSUED FOR CONSTRUCTION

WorleyParsons
resources & energy
39 MELROSE BOULEVARD, MELROSE ARCH, JOHANNESBURG
P.O. Box 61232, MARSHALLTOWN, 2107
TEL: +27 (0)11 218 3000
FAX: +27(0)11 218 3100
www.worleyparsons.com
WorleyParsons RSA (Pty) Ltd.

	NAME	SIGNATURE	DATE
DRAWN BY:	N ROBINSON		03/12/15
CHECKED :	T SNYDERS		03/12/15
DESIGNER :	T SNYDERS		03/12/15
PR ENG :	I ROBINSON		03/12/15
PROJECT ENG MANAGER	L PADAYACHEE		03/12/15
LOCAL PR ENG :			
CLIENT:			

CLIENT

MOZAMBIQUE GAS DEVELOPMENT PROJECT

Anadarko Moçambique Área 1, Lda

PROJECT
AMA 1 RESETTLEMENT VILLAGE

DRAWING DESCRIPTION
RESETTLEMENT HOUSE TYPE B REINFORCEMENT

SCALE	DATE
AS SHOWN (ORIGINAL DWG SIZE A1)	DEC 2015

DRAWING NUMBER	REV NO
C00290-00-ST-DAL-0063-001	0

ANADARKO DRAWING NUMBER
EA-MZ-CI0100-WOR-E05-00003-01

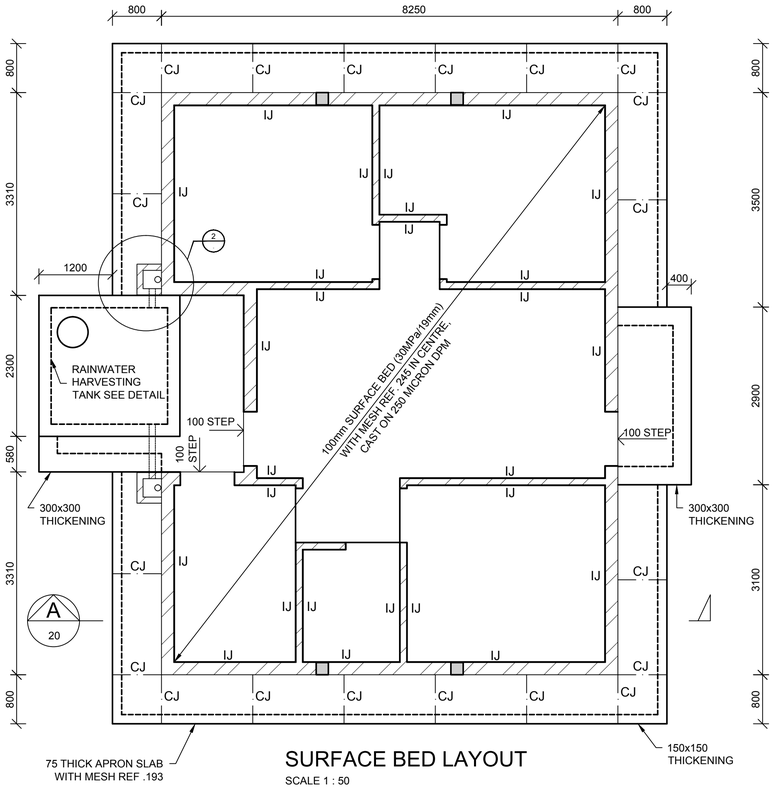

SURFACE BED LAYOUT
SCALE 1 : 50

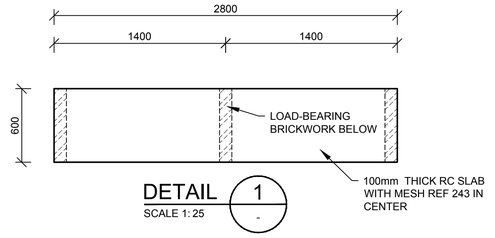

DETAIL 1
SCALE 1: 25

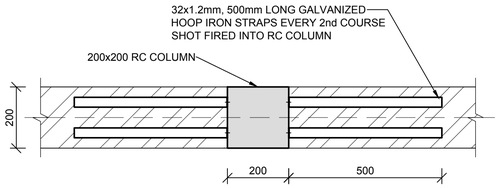

TYPICAL HOOP IRON JOINT
SCALE 1:10

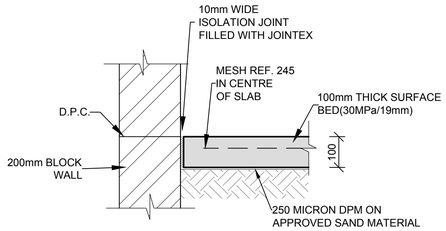

ISOLATION JOINT (I.J.)
SCALE 1:10

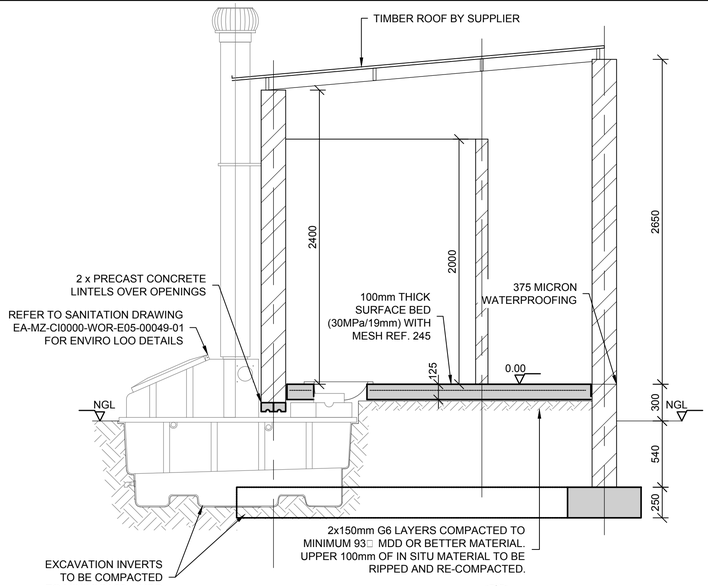

SECTION C
SCALE 1: 25

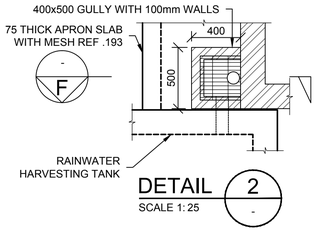

DETAIL 2
SCALE 1: 25

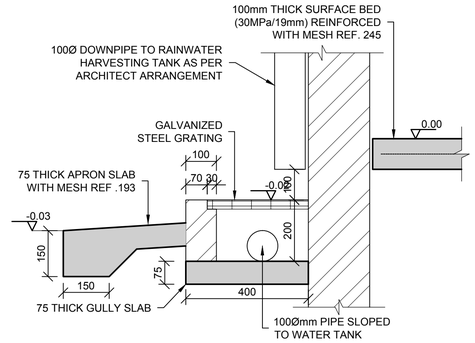

SECTION F
SCALE 1: 10

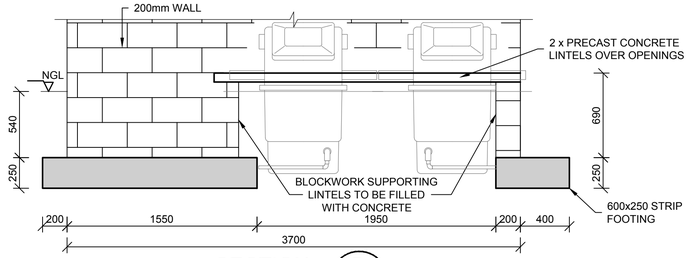

SECTION D
SCALE 1: 25

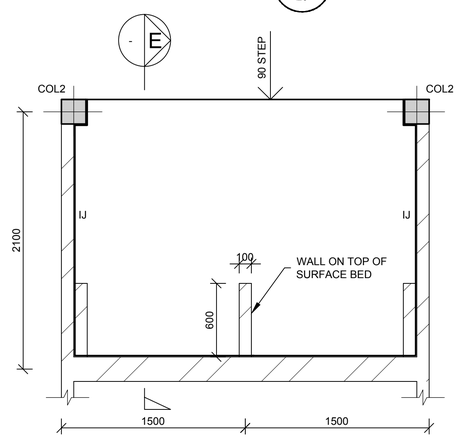

KITCHEN SURFACE BED LAYOUT
SCALE 1 : 25

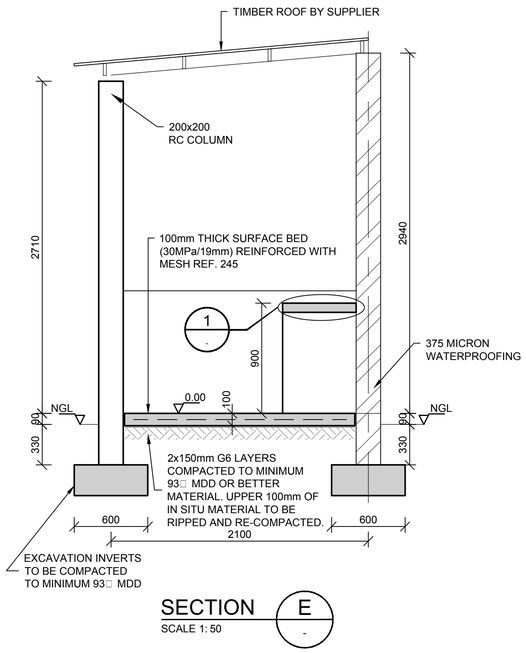

SECTION E
SCALE 1: 50

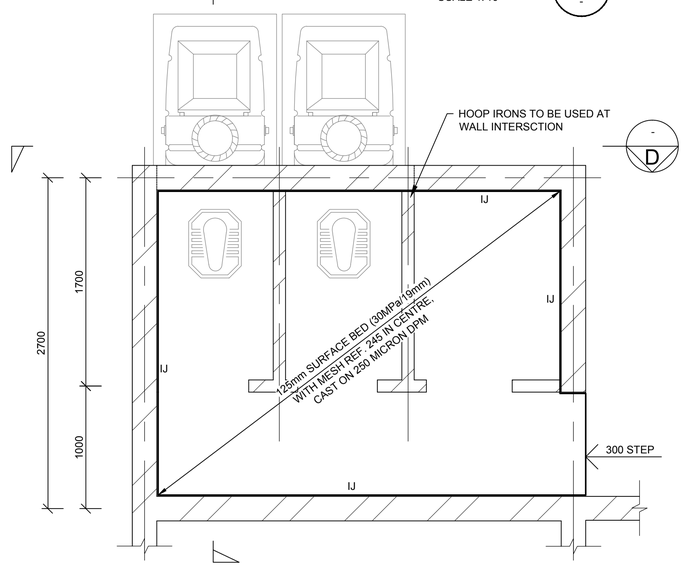

SHOWER & WC SURFACE BED LAYOUT
SCALE 1 : 25

SCALE FOR REDUCED PLAN
0 10 20 30 40 50
50mm ON ORIGINAL DRAWING

NOTES

REFER TO STRUCTURAL GENERAL NOTES
EA-MZ-CI0000-WOR-B18-00001-01

REFER TO ARCHITECTS DRAWING
EA-MZ-CI0100-WOR-E04-01604-01

REFER TO FOUNDATION LAYOUT DRAWING
EA-MZ-CI0100-WOR-E05-00001-01

REFER TO REINFORCEMENT DRAWING
EA-MZ-CI0100-WOR-E05-00003-01

ISSUED FOR CONSTRUCTION

WorleyParsons RSA retains the copyright in all intellectual property, including designs and/or documents prepared in terms of this appointment for the project covered by the appointment. The client may use the designs and/or documents for the sole purpose of their intended use on this project only subject to payment for the design having been received. Use for any other purpose, whether or not the design and/or documents have been paid for constitutes an infringement of copyright, and all rights are reserved.

All dimensions must be verified on site before the works commence. Refer any discrepancies to the Engineer.

Copyright reserved

REVISIONS

NO.	DATE	CHECKED	DONE BY	DESCRIPTION
A	06/10/15	TS	NR	ISSUED FOR INTERNAL REVIEW
B	07/10/15	TS	NR	ISSUED FOR DETAIL DESIGN
C	07/10/15	TS	NR	ISSUED FOR SQUAD CHECK
D	09/10/15	TS	NR	ISSUED FOR CLIENT REVIEW
E	17/11/15	TS	NR	ISSUED FOR CLIENT APPROVAL
0	03/12/15	TS	NR	ISSUED FOR CONSTRUCTION

WorleyParsons
resources & energy
39 MELROSE BOULEVARD, MELROSE ARCH, JOHANNESBURG
P.O. Box 61232, MARSHALLTOWN, 2107
TEL: +27 (0)11 218 3000
FAX: +27(0)11 218 3100
www.worleyparsons.com
WorleyParsons RSA (Pty) Ltd.

	NAME	SIGNATURE	DATE
DRAWN BY:	N ROBINSON		03/12/15
CHECKED :	T SNYDERS		03/12/15
DESIGNER :	T SNYDERS		03/12/15
PR ENG :	I ROBINSON		03/12/15
PROJECT ENG MANAGER	L PADAYACHEE		03/12/15
LOCAL PR ENG :			
CLIENT:			

CLIENT

MOZAMBIQUE GAS DEVELOPMENT PROJECT

Anadarko Moçambique Área 1, Lda

PROJECT
AMA 1
RESETTLEMENT
VILLAGE

DRAWING DESCRIPTION

RESETTLEMENT
HOUSE TYPE B
SURFACE BED LAYOUT

SCALE	DATE
AS SHOWN (ORIGINAL DWG SIZE A1)	DEC 2015

DRAWING NUMBER	REV NO
C00290-00-ST-DAL-0062-001	0

ANADARKO DRAWING NUMBER
EA-MZ-CI0100-WOR-E05-00002-01

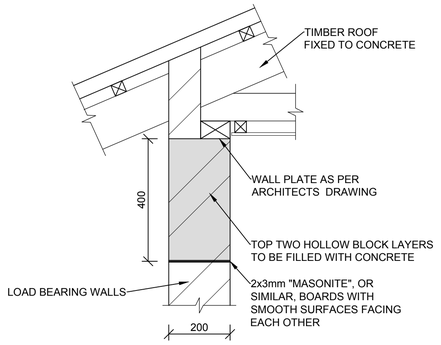

DETAIL 1
SCALE 1: 10

FOUNDATION LAYOUT
SCALE 1 : 50

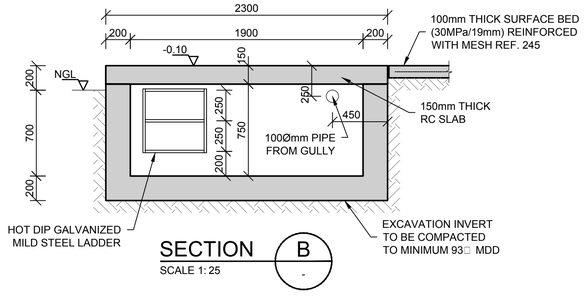

SECTION B
SCALE 1: 25

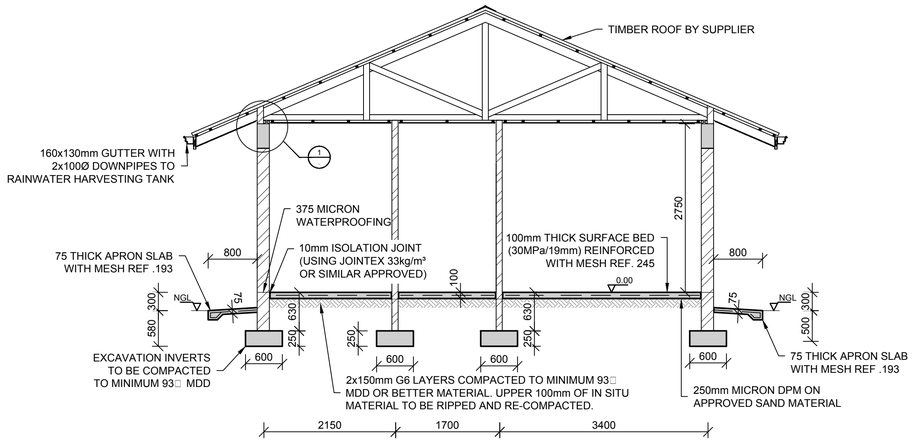

SECTION A
SCALE 1: 50

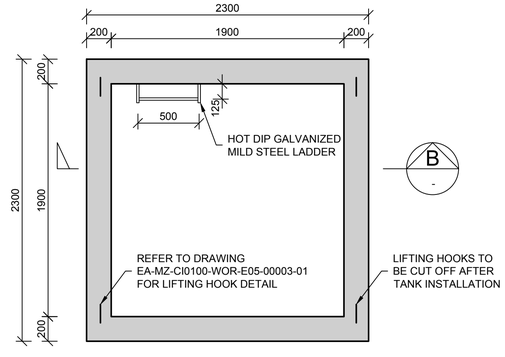

RAINWATER TANK
FLOOR LAYOUT
SCALE 1 : 25

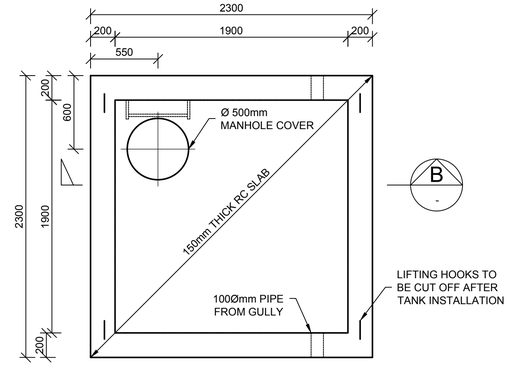

RAINWATER TANK
TOP SLAB LAYOUT
SCALE 1 : 25

SCALE FOR REDUCED PLAN
0 10 20 30 40 50
50mm ON ORIGINAL DRAWING

NOTES

REFER TO STRUCTURAL GENERAL NOTES
EA-MZ-CI0000-WOR-B18-00001-01

REFER TO ARCHITECTS DRAWING
EA-MZ-CI0100-WOR-E04-01604-01

REFER TO SURFACE BED AND RING BEAM
EA-MZ-CI0100-WOR-E05-00002-01

REFER TO REINFORCEMENT DRAWING
EA-MZ-CI0100-WOR-E05-00003-01

ISSUED FOR CONSTRUCTION

WorleyParsons RSA retains the copyright in all intellectual property, including designs and/or documents prepared in terms of this appointment for the project covered by the appointment. The client may use the designs and/or documents for the sole purpose of their intended use on this project only subject to payment for the design having been received. Use for any other purpose, whether or not the design and/or documents have been paid for constitutes an infringement of copyright, and all rights are reserved.

All dimensions must be verified on site before the works commence. Refer any discrepancies to the Engineer.

Copyright reserved

REVISIONS

NO.	DATE	CHECKED	DONE BY	DESCRIPTION
A	06/10/15	TS	NR	ISSUED FOR INTERNAL REVIEW
B	07/10/15	TS	NR	ISSUED FOR DETAIL DESIGN
C	07/10/15	TS	NR	ISSUED FOR SQUAD CHECK
D	09/10/15	TS	NR	ISSUED FOR CLIENT REVIEW
E	17/11/15	TS	NR	ISSUED FOR CLIENT APPROVAL
0	03/12/15	TS	NR	ISSUED FOR CONSTRUCTION

WorleyParsons
resources & energy
39 MELROSE BOULEVARD, MELROSE ARCH, JOHANNESBURG
P.O. Box 61232, MARSHALLTOWN, 2107
TEL: +27 (0)11 218 3000
FAX: +27(0)11 218 3100
www.worleyparsons.com
WorleyParsons RSA (Pty) Ltd.

	NAME	SIGNATURE	DATE
DRAWN BY:	N ROBINSON		03/12/15
CHECKED :	T SNYDERS		03/12/15
DESIGNER :	T SNYDERS		03/12/15
PR ENG :	I ROBINSON		03/12/15
PROJECT ENG MANAGER	L PADAYACHEE		03/12/15
LOCAL PR ENG :			
CLIENT:			

CLIENT

MOZAMBIQUE GAS DEVELOPMENT PROJECT

Anadarko Moçambique Área 1, Lda

PROJECT
AMA 1
RESETTLEMENT
VILLAGE

DRAWING DESCRIPTION

RESETTLEMENT
HOUSE TYPE B
FOUNDATION LAYOUT

SCALE	DATE
AS SHOWN (ORIGINAL DWG SIZE A1)	DEC 2015

DRAWING NUMBER: C00290-00-ST-DAL-0061-001
REV NO: 0

ANADARKO DRAWING NUMBER
EA-MZ-CI0100-WOR-E05-00001-01

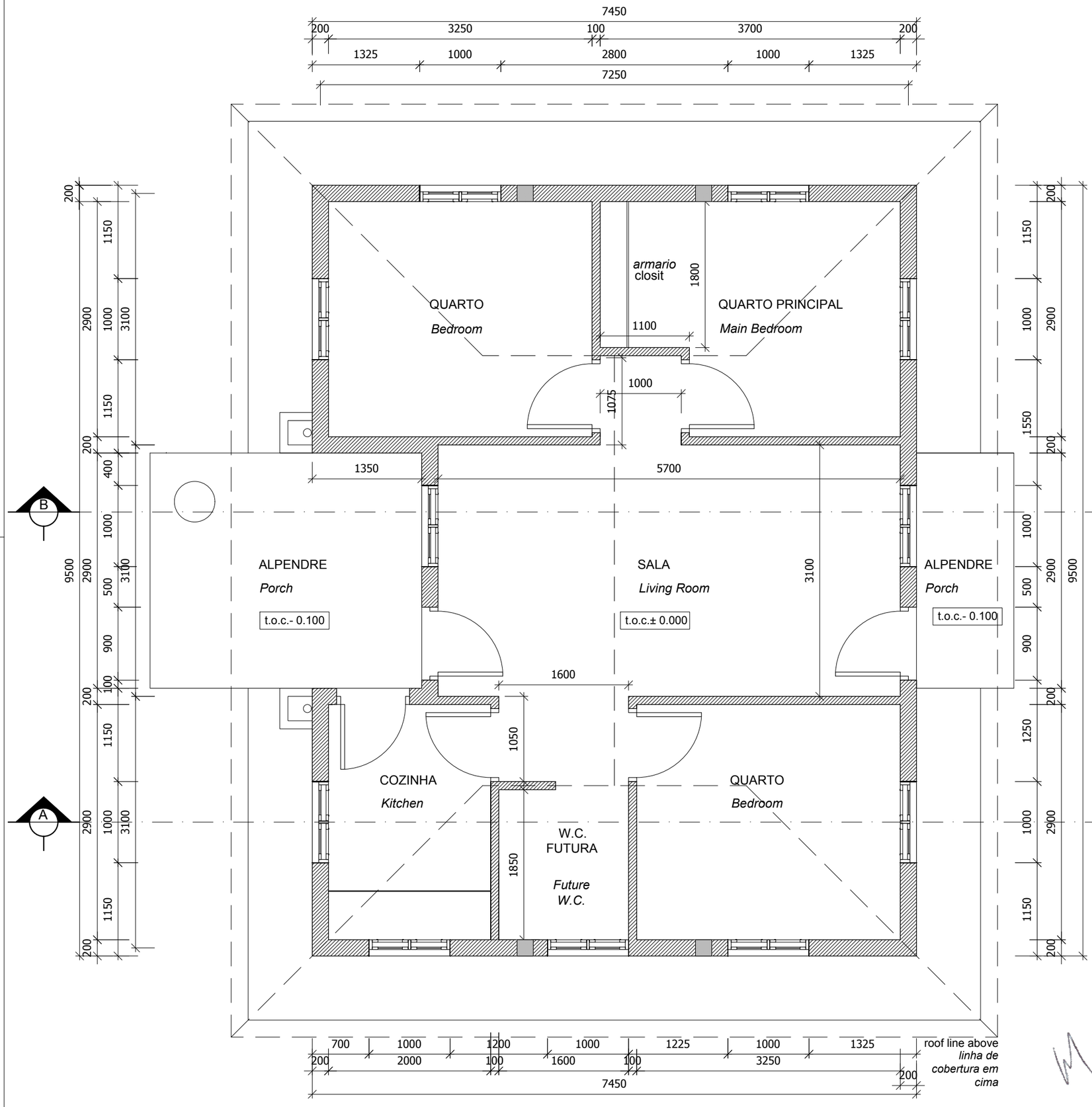

ESTE DESENHO É PARA SER LIDO EM CONJUNTO COM:

THIS DRAWING IS TO BE READ IN CONJUCTION WITH:

ARCHITECTURAL
EA-MZ-CI0100-WOR-E04-01604-01
EA-MZ-CI0100-WOR-E05-01601-01
EA-MZ-CI0100-WOR-E05-01602-01
EA-MZ-CI0100-WOR-E05-00100-01
EA-MZ-CI0100-WOR-E05-01603-01
EA-MZ-CI0100-WOR-E05-01605-01
EA-MZ-CI0100-WOR-E05-00105-01
EA-MZ-CI0100-WOR-E05-00105-02
EA-MZ-CI0100-WOR-E05-01606-01
EA-MZ-CI0100-WOR-E05-01608-01

STRUCTURAL
EA-MZ-CI0100-WOR-E04-00001-01
EA-MZ-CI0100-WOR-E04-00002-01
EA-MZ-CI0100-WOR-E05-00010-01
EA-MZ-CI0100-WOR-E05-00001-01
EA-MZ-CI0100-WOR-E05-00002-01
EA-MZ-CI0100-WOR-E05-00003-01

WATER
EA-MZ-CI0100-WOR-E05-00120-01

ELECTRICAL
EA-MZ-CI0000-WOR-E02-00002-01
EA-MZ-CI0000-WOR-E02-00002-02

ISSUED FOR CONSTRUCTION

WorleyParsons RSA retains the copyright in all intellectual property, including designs and/or documents prepared in terms of this appointment for the project covered by the appointment. The client may use the designs and/or documents for the sole purpose of their intended use on this project only subject to payment for the the design having been received. Use for any other purpose, whether or not the design and/or documents have been paid for constitutes an infringement of copyright, and all rights are reserved.

All dimensions must be verified on site before the works commence. Refer any discrepancies to the Engineer.

Copyright reserved

REVISIONS

NO.	DATE	CHK	DONE BY	DESCRIPTION
A	21/07/15	MM	AP	ISSUED INTERNAL REVIEW
B	21/07/15	MM	AP	ISSUED FOR DETAIL DESIGN
C	21/07/15	MM	AP	ISSUED FOR SQUAD CHECK
D	01/10/15	MM	AP	ISSUED FOR CLIENT REVIEW
E	16/11/15	MM	AP	ISSUED CLIENT APPROVAL
0	25/11/15	MM	AP	ISSUED FOR CONSTRUCTION

WorleyParsons
resources & energy
39 MELROSE BOULEVARD, MELROSE ARCH, JOHANNESBURG
P.O. Box 61232, MARSHALLTOWN, 2107
TEL: +27 (0)11 218 3000
FAX: +27(0)11 218 3100
www.worleyparsons.com
WorleyParsons RSA (Pty) Ltd.

MESCH arquitectos

CLIENT

MOZAMBIQUE GAS DEVELOPMENT PROJECT

Anadarko
Moçambique Área 1, Lda

PROJECT
AMA 1
RESETTLEMENT
VILLAGE

DRAWING DESCRIPTION
CASA DE REASSENTAMENTO - PLANTA DE PISO

RESETTLEMENT HOUSE - FLOOR PLAN

SCALE	DATE
A3@ 1:50	NOV 2015

DRAWING NUMBER:	REV N°
C00290-00-AR-DLP-0134-001	0

ANADARKO DRAWING NUMBER:
EA-MZ-CI0100-WOR-E04-01605-01

ESTE DESENHO É PARA SER LIDO EM CONJUNTO COM:

THIS DRAWING IS TO BE READ IN CONJUCTION WITH:

ARCHITECTURAL
EA-MZ-CI0100-WOR-E04-01605-01
EA-MZ-CI0100-WOR-E05-01607-03
EA-MZ-CI0100-WOR-E05-01608-01
EA-MZ-CI0100-WOR-E05-01611-01
EA-MZ-CI0100-WOR-E05-01612-01
EA-MZ-CI0100-WOR-E05-01613-01

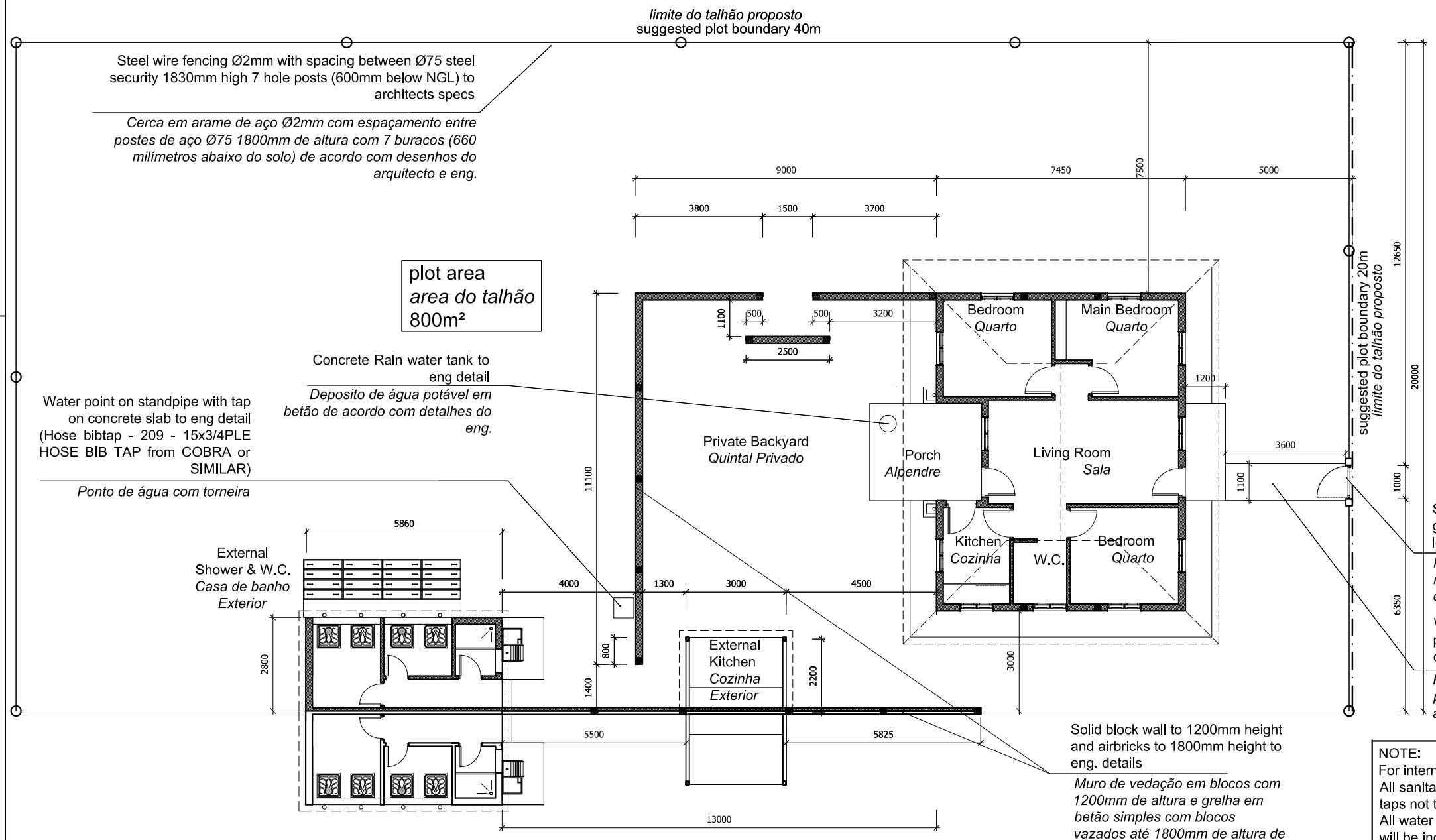

NOTE:
For internal kitchen and W.C:
All sanitary ware, kitchen sink and taps not to be included.
All water pipes and sewege system will be included for future use.
NOTA:
Para a cozinha e W.C. interna:
Todas as loiças sanitárias e torneiras não estão incluidas.
Toda a tubagem de água e saneamento estara incluida para futura ligação.

ISSUED FOR APPROVAL

WorleyParsons RSA retains the copyright in all intellectual property, including designs and/or documents prepared in terms of this appointment for the project covered by the appointment. The client may use the designs and/or documents for the sole purpose of their intended use on this project only subject to payment for the design having been received. Use for any other purpose, whether or not the design and/or documents have been paid for constitutes an infringement of copyright, and all rights are reserved.

All dimensions must be verified on site before the works commence. Refer any discrepancies to the Engineer.

Copyright reserved

REVISIONS

NO.	DATE	CHK	DONE BY	DESCRIPTION
A	21/07/15	MM	AP	ISSUED INTERNAL REVIEW
B	21/07/15	MM	AP	ISSUED FOR DETAIL DESIGN
C	21/07/15	MM	AP	ISSUED FOR SQUAD CHECK
D	01/10/15	MM	AP	ISSUED FOR CLIENT REVIEW
E	22/02/16	MM	AP	ISSUED CLIENT APPROVAL

WorleyParsons
resources & energy
39 MELROSE BOULEVARD, MELROSE ARCH, JOHANNESBURG
P.O. Box 61232, MARSHALLTOWN, 2107
TEL: +27 (0)11 218 3000
FAX: +27(0)11 218 3100
www.worleyparsons.com
WorleyParsons RSA (Pty) Ltd.

MESCH arquitectos

CLIENT

MOZAMBIQUE GAS DEVELOPMENT PROJECT

Anadarko Moçambique Área 1, Lda

PROJECT
AMA 1
RESETTLEMENT
VILLAGE

DRAWING DESCRIPTION
CASA DE REASSENTAMENTO - PLANTA GERAL TIPO COM LATRINA MELHORADA
RESETTLEMENT HOUSE - SITE PLAN WITH VIDP LATRINE

SCALE	DATE
A3@ 1:150	FEB 2016

DRAWING NUMBER:	REV Nº
C00290-00-AR-DLP-0133-002	E

ANADARKO DRAWING NUMBER:
EA-MZ-CI0100-WOR-E04-01604-02

ESTE DESENHO É PARA SER LIDO EM CONJUNTO COM:

THIS DRAWING IS TO BE READ IN CONJUCTION WITH:

ARCHITECTURAL
EA-MZ-CI0100-WOR-E04-01605-01
EA-MZ-CI0100-WOR-E05-01607-01
EA-MZ-CI0100-WOR-E05-01608-01
EA-MZ-CI0100-WOR-E05-01611-01
EA-MZ-CI0100-WOR-E05-01612-01
EA-MZ-CI0100-WOR-E05-01613-01

STRUCTURAL
EA-MZ-CI0100-WOR-E04-00001-01
EA-MZ-CI0100-WOR-E04-00002-01
EA-MZ-CI0100-WOR-E05-00010-01
EA-MZ-CI0100-WOR-E05-00001-01
EA-MZ-CI0100-WOR-E05-00002-01
EA-MZ-CI0100-WOR-E05-00003-01

WATER
EA-MZ-CI0100-WOR-E05-00120-01

ELECTRICAL
EA-MZ-CI0000-WOR-E02-00002-01
EA-MZ-CI0000-WOR-E02-00002-02

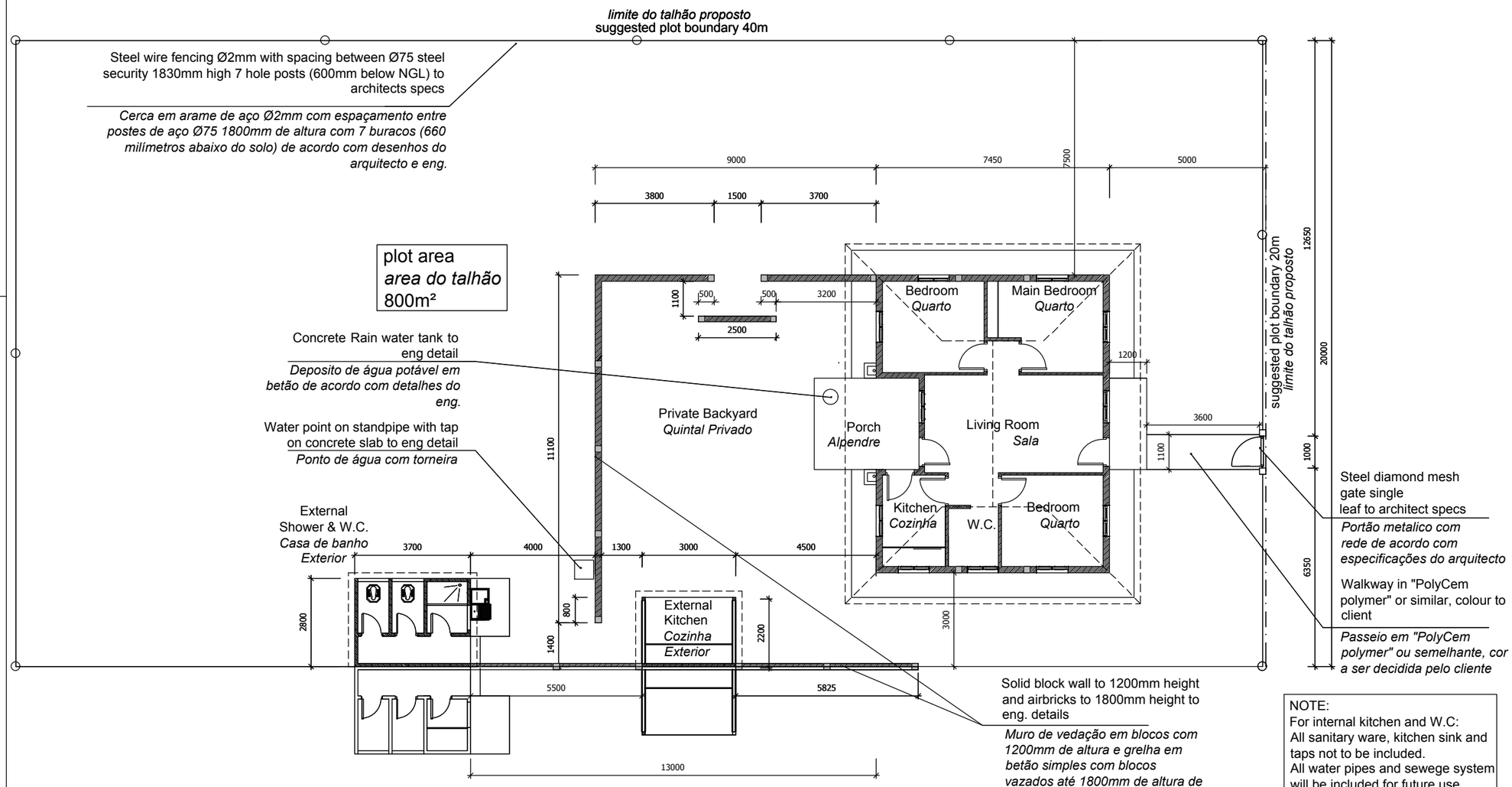

NOTE:
For internal kitchen and W.C:
All sanitary ware, kitchen sink and taps not to be included.
All water pipes and sewege system will be included for future use.
NOTA:
Para a cozinha e W.C. interna:
Todas as loiças sanitárias e torneiras não estão incluidas.
Toda a tubagem de água e saneamento estara incluida para futura ligação.

ISSUED FOR CONSTRUCTION

WorleyParsons RSA retains the copyright in all intellectual property, including designs and/or documents prepared in terms of this appointment for the project covered by the appointment. The client may use the designs and/or documents for the sole purpose of their intended use on this project only subject to payment for the design having been received. Use for any other purpose, whether or not the design and/or documents have been paid for constitutes an infringement of copyright, and all rights are reserved.

All dimensions must be verified on site before the works commence. Refer any discrepancies to the Engineer.

Copyright reserved

REVISIONS

NO.	DATE	CHK	DONE BY	DESCRIPTION
A	21/07/15	MM	AP	ISSUED INTERNAL REVIEW
B	21/07/15	MM	AP	ISSUED FOR DETAIL DESIGN
C	21/07/15	MM	AP	ISSUED FOR SQUAD CHECK
D	01/10/15	MM	AP	ISSUED FOR CLIENT REVIEW
E	16/11/15	MM	AP	ISSUED CLIENT APPROVAL
0	25/11/15	MM	AP	ISSUED FOR CONSTRUCTION

WorleyParsons
resources & energy
39 MELROSE BOULEVARD, MELROSE ARCH, JOHANNESBURG
P.O. Box 61232, MARSHALLTOWN, 2107
TEL: +27 (0)11 218 3000
FAX: +27(0)11 218 3100
www.worleyparsons.com
WorleyParsons RSA (Pty) Ltd.

MESCH arquitectos

CLIENT

MOZAMBIQUE GAS DEVELOPMENT PROJECT

Anadarko Moçambique Área 1, Lda

PROJECT
AMA 1
RESETTLEMENT
VILLAGE

DRAWING DESCRIPTION
CASA DE REASSENTAMENTO - PLANTA GERAL TIPO

RESETTLEMENT HOUSE - SITE PLAN

SCALE	DATE
A3@ 1:150	NOV 2015

DRAWING NUMBER:	REV Nº
C00290-00-AR-DLP-0133-001	0

ANADARKO DRAWING NUMBER:
EA-MZ-CI0100-WOR-E04-01604-01

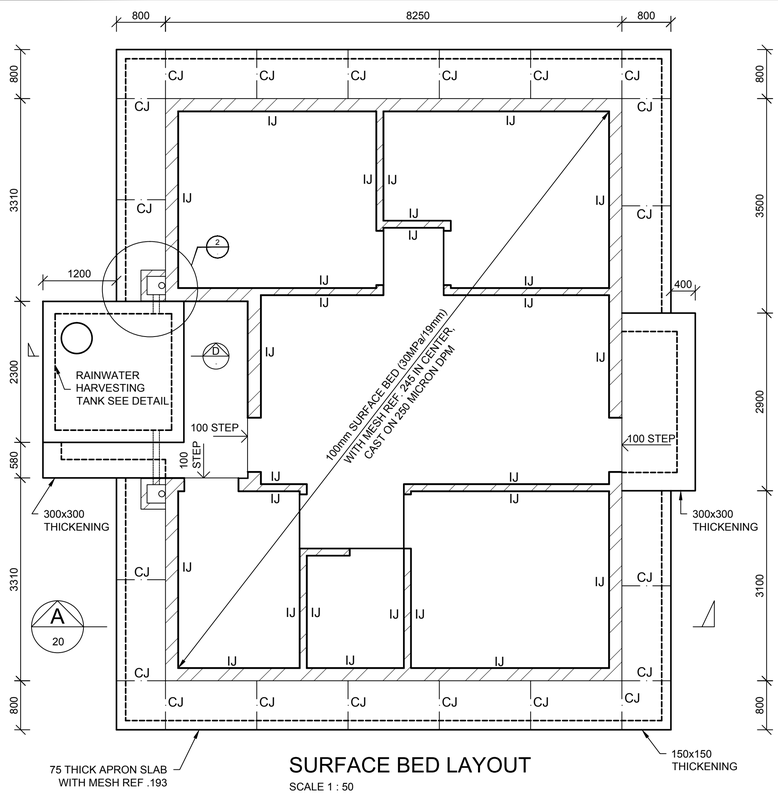

SURFACE BED LAYOUT

SCALE 1 : 50

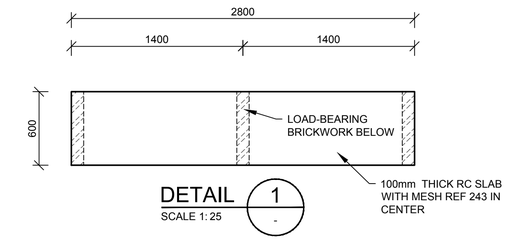

DETAIL 1

SCALE 1: 25

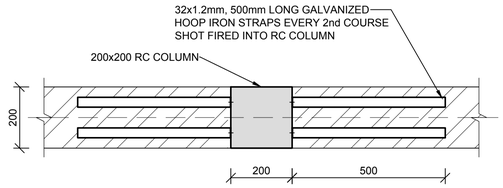

TYPICAL HOOP IRON JOINT

SCALE 1:10

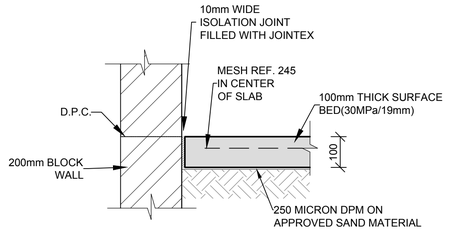

ISOLATION JOINT (I.J.)

SCALE 1:10

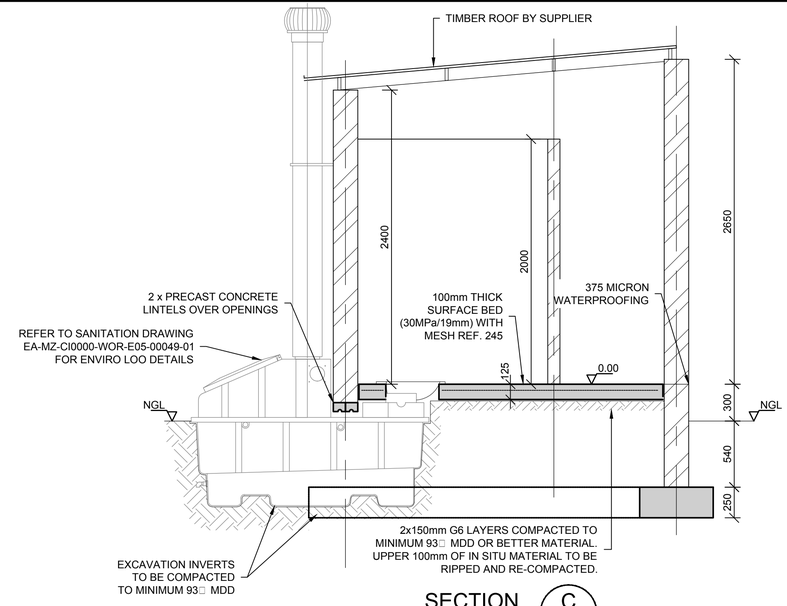

SECTION C

SCALE 1: 25

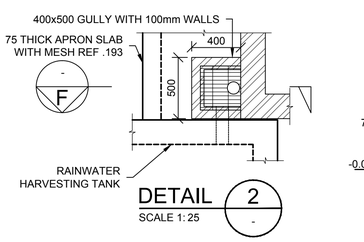

DETAIL 2

SCALE 1: 25

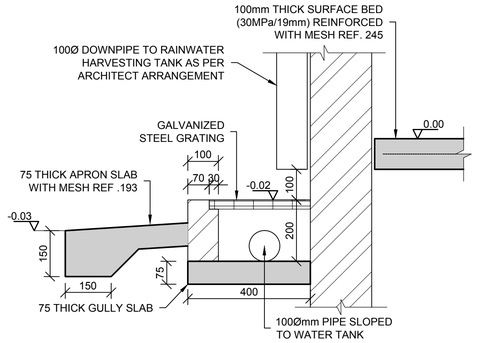

SECTION F

SCALE 1: 10

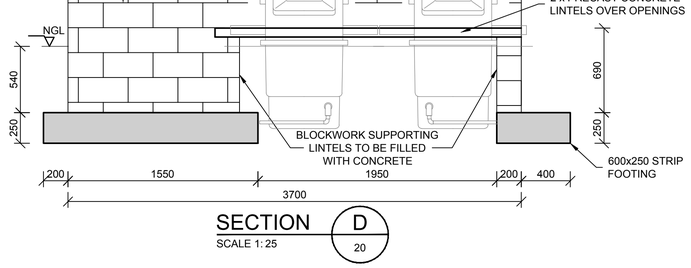

SECTION D

SCALE 1: 25

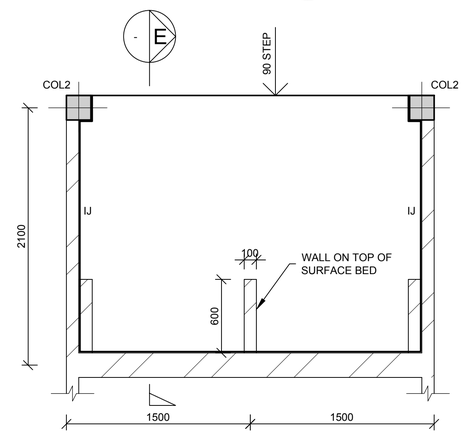

KITCHEN SURFACE BED LAYOUT

SCALE 1 : 25

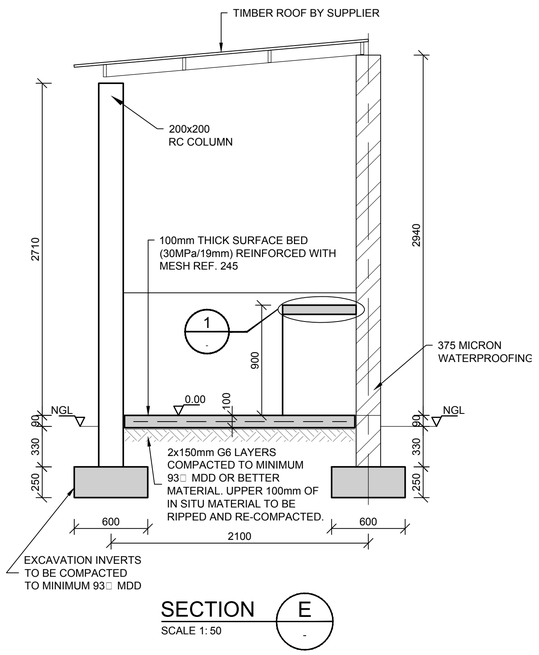

SECTION E

SCALE 1: 50

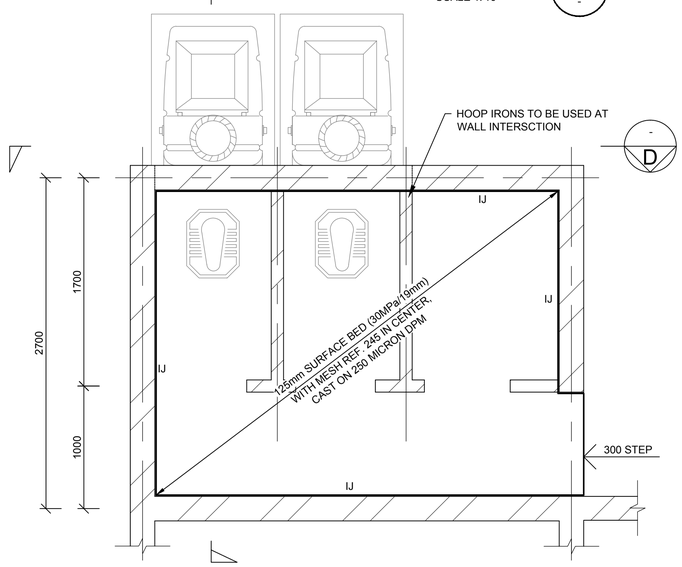

SHOWER & WC SURFACE BED LAYOUT

SCALE 1 : 25

SCALE FOR REDUCED PLAN
0 10 20 30 40 50
50mm ON ORIGINAL DRAWING

NOTES

REFER TO STRUCTURAL GENERAL NOTES DRAWING
EA-MZ-CI0000-WOR-B18-00001-01

REFER TO ARCHITECTS DRAWING
EA-MZ-CI0100-WOR-E04-01604-01

REFER TO FOUNDATION LAYOUT DRAWING
EA-MZ-CI0100-WOR-E04-00001-01

REFER TO REINFORCEMENT DRAWING
EA-MZ-CI0100-WOR-E05-00010-01

ISSUED FOR CONSTRUCTION

WorleyParsons RSA retains the copyright in all intellectual property, including designs and/or documents prepared in terms of this appointment for the project covered by the appointment. The client may use the designs and/or documents for the sole purpose of their intended use on this project only subject to payment for the design having been received. Use for any other purpose, whether or not the design and/or documents have been paid for constitutes an infringement of copyright, and all rights are reserved.

All dimensions must be verified on site before the works commence. Refer any discrepancies to the Engineer.

Copyright reserved

REVISIONS

NO.	DATE	CHECKED	DONE BY	DESCRIPTION
A	17/09/15	TS	NR	ISSUED FOR INTERNAL REVIEW
B	21/09/15	TS	NR	ISSUED FOR DETAIL DESIGN
C	21/09/15	TS	NR	ISSUED FOR SQUAD CHECK
D	29/09/15	TS	NR	ISSUED FOR CLIENT REVIEW
E	17/11/15	TS	NR	ISSUED FOR CLIENT APPROVAL
0	03/12/15	TS	NR	ISSUED FOR CONSTRUCTION

WorleyParsons
resources & energy
39 MELROSE BOULEVARD, MELROSE ARCH, JOHANNESBURG
P.O. Box 61232, MARSHALLTOWN, 2107
TEL: +27 (0)11 218 3000
FAX: +27(0)11 218 3100
www.worleyparsons.com
WorleyParsons RSA (Pty) Ltd.

	NAME	SIGNATURE	DATE
DRAWN BY:	N ROBINSON		03/12/15
CHECKED :	T SNYDERS		03/12/15
DESIGNER :	T SNYDERS		03/12/15
PR ENG :	I ROBINSON		03/12/15
PROJECT ENG MANAGER	L PADAYACHEE		03/12/15
LOCAL PR ENG :			
CLIENT:			

CLIENT

MOZAMBIQUE GAS DEVELOPMENT PROJECT

Anadarko Moçambique Área 1, Lda

PROJECT
AMA 1
RESETTLEMENT
VILLAGE

DRAWING DESCRIPTION

RESETTLEMENT
HOUSE TYPE A
SURFACE BED LAYOUT

SCALE	DATE
AS SHOWN (ORIGINAL DWG SIZE A1)	DEC 2015

DRAWING NUMBER	REV NO
C00290-00-ST-DAL-0021-001	0

ANADARKO DRAWING NUMBER
EA-MZ-CI0100-WOR-E04-00002-01

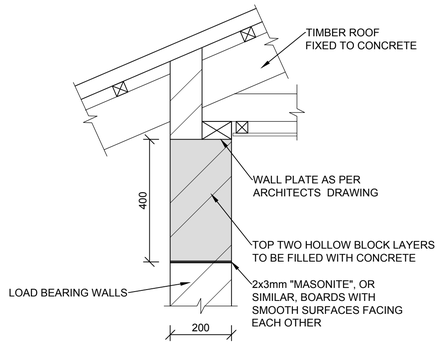

DETAIL 1
SCALE 1: 10

FOUNDATION LAYOUT
SCALE 1 : 50

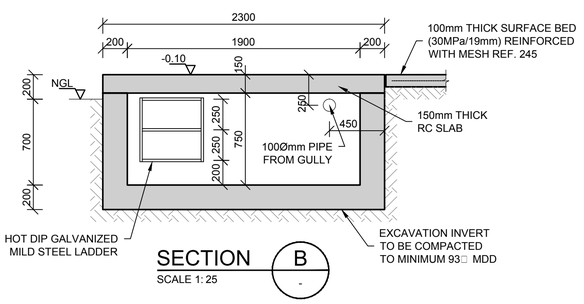

SECTION B
SCALE 1: 25

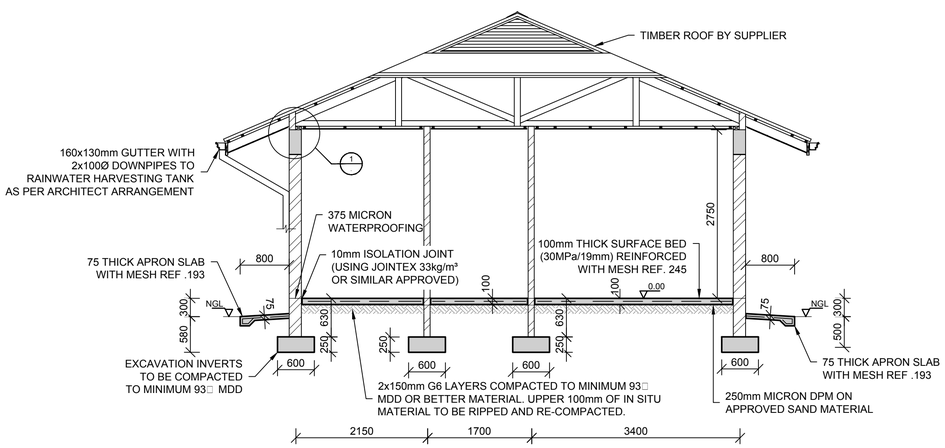

SECTION A
SCALE 1: 50

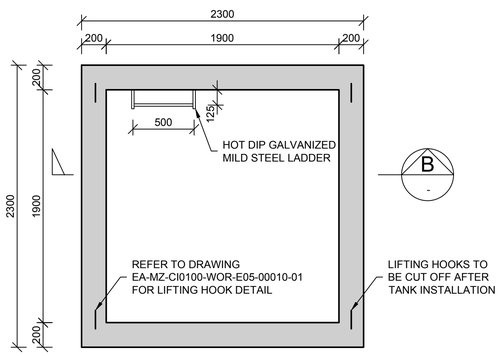

RAINWATER TANK FLOOR LAYOUT
SCALE 1 : 25

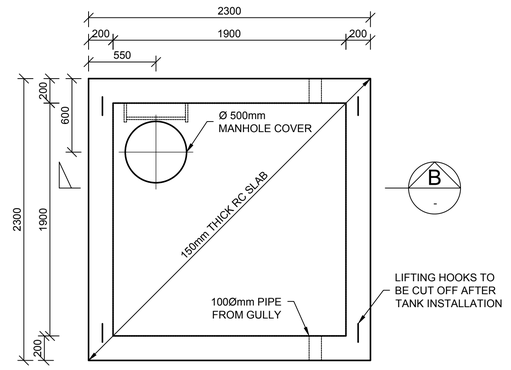

RAINWATER TANK TOP SLAB LAYOUT
SCALE 1 : 25

SCALE FOR REDUCED PLAN
0 10 20 30 40 50
50mm ON ORIGINAL DRAWING

NOTES

REFER TO STRUCTURAL GENERAL NOTES
EA-MZ-CI0000-WOR-B18-00001-01

REFER TO ARCHITECTS DRAWING
EA-MZ-CI0100-WOR-E04-01604-01

REFER TO SURFACE BED AND RING BEAM DRAWING
EA-MZ-CI0100-WOR-E04-00002-01

REFER TO REINFORCEMENT DRAWING
EA-MZ-CI0100-WOR-E05-00010-01

ISSUED FOR CONSTRUCTION

WorleyParsons RSA retains the copyright in all intellectual property, including designs and/or documents prepared in terms of this appointment for the project covered by the appointment. The client may use the designs and/or documents for the sole purpose of their intended use on this project only subject to payment for the design having been received. Use for any other purpose, whether or not the design and/or documents have been paid for constitutes an infringement of copyright, and all rights are reserved.

All dimensions must be verified on site before the works commence. Refer any discrepancies to the Engineer.

Copyright reserved

REVISIONS

NO.	DATE	CHECKED	DONE BY	DESCRIPTION
A	17/09/15	TS	NR	ISSUED FOR INTERNAL REVIEW
B	21/09/15	TS	NR	ISSUED FOR DETAIL DESIGN
C	21/09/15	TS	NR	ISSUED FOR SQUAD CHECK
D	29/09/15	TS	NR	ISSUED FOR CLIENT REVIEW
E	17/11/15	TS	NR	ISSUED FOR CLIENT APPROVAL
0	03/12/15	TS	NR	ISSUED FOR CONSTRUCTION

WorleyParsons
resources & energy
39 MELROSE BOULEVARD, MELROSE ARCH, JOHANNESBURG
P.O. Box 61232, MARSHALLTOWN, 2107
TEL: +27 (0)11 218 3000
FAX: +27(0)11 218 3100
www.worleyparsons.com
WorleyParsons RSA (Pty) Ltd.

	NAME	SIGNATURE	DATE
DRAWN BY:	N ROBINSON		03/12/15
CHECKED :	T SNYDERS		03/12/15
DESIGNER :	T SNYDERS		03/12/15
PR ENG :	I ROBINSON		03/12/15
PROJECT ENG MANAGER	L PADAYACHEE		03/12/15
LOCAL PR ENG :			
CLIENT:			

CLIENT

MOZAMBIQUE GAS DEVELOPMENT PROJECT

Anadarko
Moçambique Área 1, Lda

PROJECT
AMA 1
RESETTLEMENT
VILLAGE

DRAWING DESCRIPTION

RESETTLEMENT
HOUSE TYPE A
FOUNDATION LAYOUT

SCALE	DATE
AS SHOWN (ORIGINAL DWG SIZE A1)	DEC 2015

DRAWING NUMBER	REV NO
C00290-00-ST-DAL-0020-001	0

ANADARKO DRAWING NUMBER
EA-MZ-CI0100-WOR-E04-00001-01

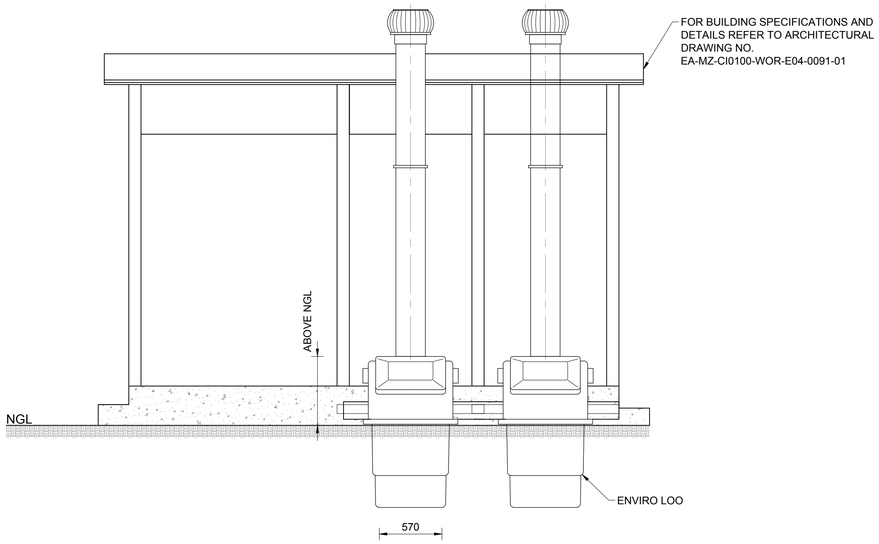

BACK ELEVATION
SCALE 1:25

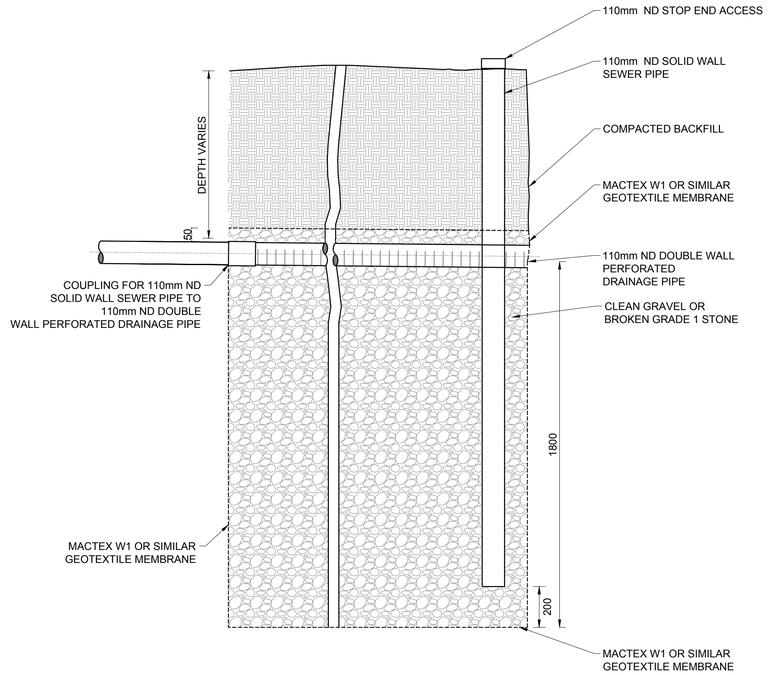

SOAK AWAY
N.T.S.

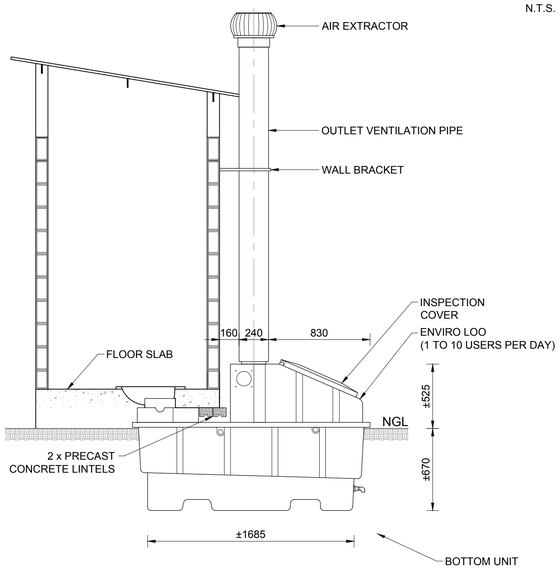

SECTION A
SCALE 1:25

REFERENCES	
ANADARKO DRAWING NO.	DRAWING DESCRIPTION
EA-MZ-CI0100-WOR-E05-00048-01	RESIDENTIAL UNITS: WATER AND SANITATION LAYOUT SHEET 1 of 2
EA-MZ-CI0100-WOR-E05-00120-01	RESIDENTIAL UNITS: INTERNAL RETICULATIONS

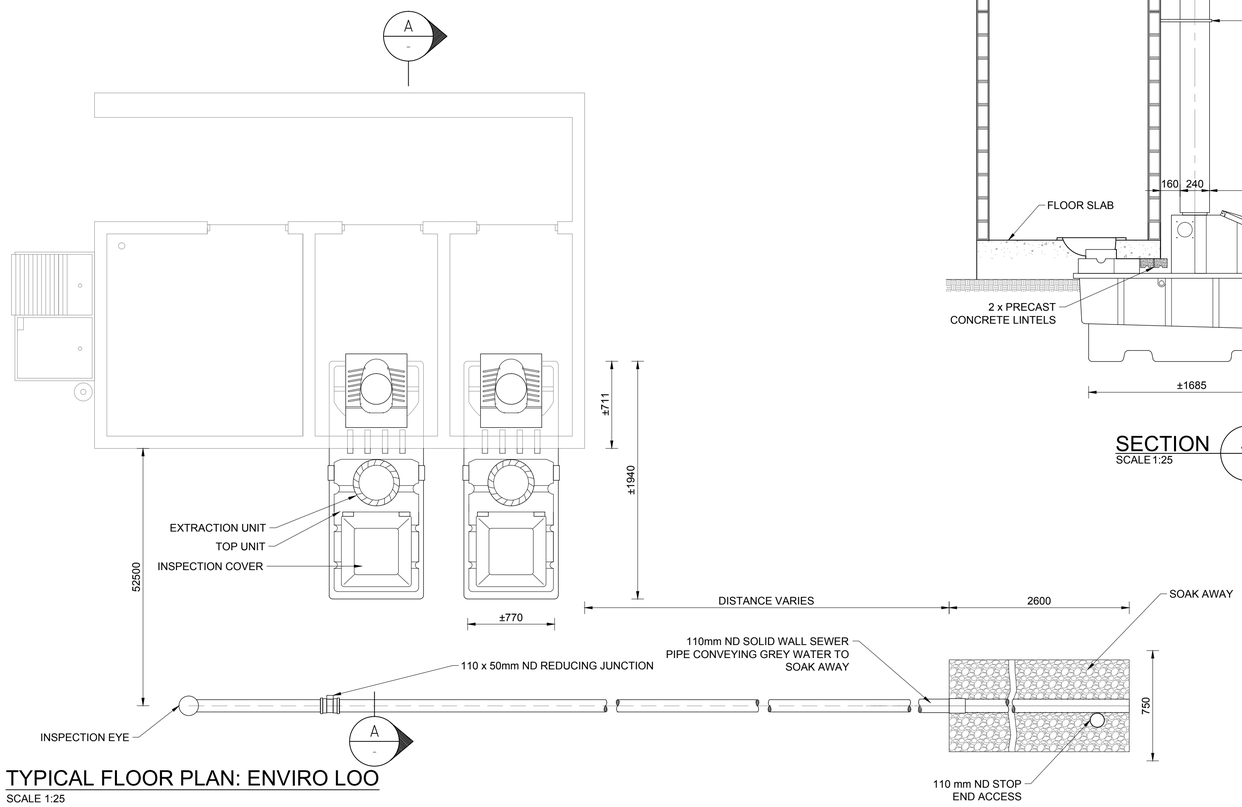

TYPICAL FLOOR PLAN: ENVIRO LOO
SCALE 1:25

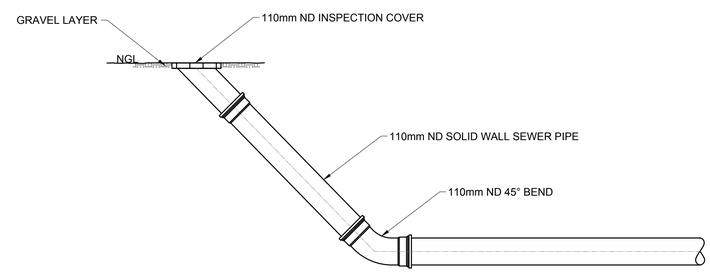

END LINE INSPECTION EYE DETAIL
N.T.S.

SCALE FOR REDUCED PLAN
0 10 20 30 40 50
50mm ON ORIGINAL DRAWING

NOTES
1. ENVIRO LOO SUITABLE FOR INDUSTRIAL USE CAPACITY PER ENVIRO LOO, 20 TO 40 USERS PER DAY.
2. ENVIRO LOO TO BE INSTALLED IN ACCORDANCE WITH MANUFACTURER'S SPECIFICATIONS.

LEGEND

ISSUED FOR CONSTRUCTION

WorleyParsons RSA retains the copyright in all intellectual property, including designs and/or documents prepared in terms of this appointment for the project covered by the appointment. The client may use the designs and/or documents for the sole purpose of their intended use on this project only subject to payment for the design having been received. Use for any other purpose, whether or not the design and/or documents have been paid for constitutes an infringement of copyright, and all rights are reserved.

All dimensions must be verified on site before the works commence. Refer any discrepancies to the Engineer.

Copyright reserved

REVISIONS

NO.	DATE	CHECKED	DONE BY	DESCRIPTION
A	15/09/15	LL	CS	ISSUED FOR INTERNAL REVIEW
B	17/09/15	LL	CS	ISSUED FOR DETAIL DESIGN
C	29/09/15	LL	CS	ISSUED FOR SQUAD CHECK
D	06/10/15	LL	CS	ISSUED FOR CLIENT REVIEW
E	06/11/15	LL	CS	ISSUED FOR CLIENT APPROVAL
0	03/12/15	LL	CS	ISSUED FOR CONSTRUCTION

WorleyParsons
resources & energy
39 MELROSE BOULEVARD, MELROSE ARCH, JOHANNESBURG
P.O. Box 61232, MARSHALLTOWN, 2107
TEL: +27 (0)11 218 3000
FAX: +27(0)11 218 3100
www.worleyparsons.com
WorleyParsons RSA (Pty) Ltd.

	NAME	SIGNATURE	DATE
DRAWN BY:	C SWIEGERS		03/12/2015
CHECKED:	L LOUW		03/12/2015
DESIGNER:	B van SCHOOR		03/12/2015
PR ENG:	L LOUW 20090253		03/12/2015
PROJECT ENG MANAGER:	L PADAYACHEE		03/12/2015
LOCAL PR ENG:			
CLIENT:			

CLIENT

MOZAMBIQUE GAS DEVELOPMENT PROJECT

Anadarko Moçambique Área 1, Lda

PROJECT
AMA 1 RESETTLEMENT VILLAGE

DRAWING DESCRIPTION
RESIDENTIAL UNITS: DETAILS OF ENVIRO LOO INSTALLATION SHEET 2 OF 2

SCALE	DATE
AS SHOWN (ORIGINAL DWG SIZE A1)	DECEMBER 2015

DRAWING NUMBER	REV NO
C00290-00-WW-DRD-0018-002	0

ANADARKO DRAWING NUMBER
EA-MZ-CI0100-WOR-E05-00049-02

WINDOWS SCHEDULE/ Mapa de vãos: Janela

ALL DIMENSIONS AND LEVELS ARE TO BE CHECKED/VERIFIED ON SITE AND ANY DISCREPENCIES ARE TO BE REPORTED TO THE ARCHITECT
TODAS DIMENSÕES E NÍVEIS DEVEM SER VERIFICADOS NA OBRA E QUALQUER DISCREPÂNCIA DEVERÁ SER COMUNICADA AO ARQUITECTO

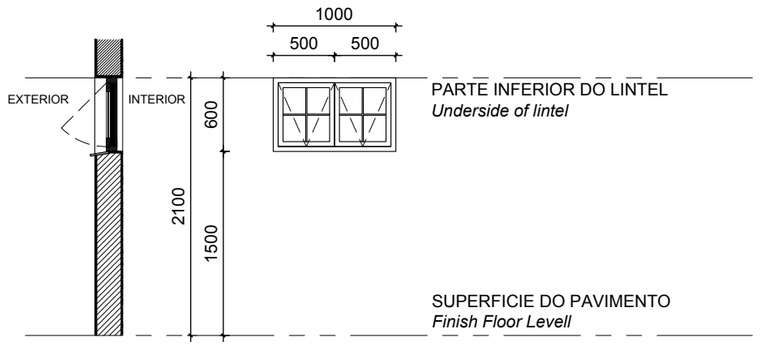

ALÇADO/*Elevation*
ESCALA/*Scale* 1:50

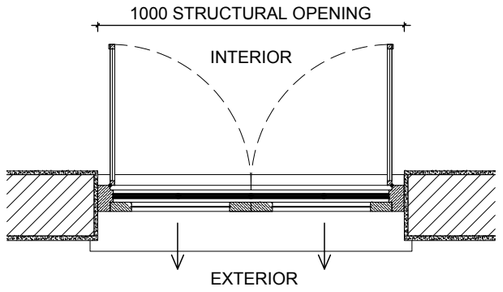

PLANTA/*Plan*
ESCALA/*Scale* 1:20

Code: Codigo:	W2	**Position:** Localização:	Bedrooms, Kitchen & Internal Toilet	**Qty:** Qtd:	6
Frame: Aro:	WOOD FRAME TO MANUFACTURERS SPECS TOP HUNG SOLID TIMBER WINDOW , 2 GLASS PANELS ON OUTSIDE & 2 MOSQUITO SCREEN PANELS ON THE INSIDE WITH ELECTROPLATED 10 mm ROUND B/BARS WINDOW TO BE TO TYPE ZWTH - from SWARTLAND OR SIMILAR				
Finish: Acabamentos:	1 COAT PRIMER 1 COAT UNDERCOAT AND 2 COATS PLASCON ENAMEL DOORS & TRIMS COLOUR "LIGHT BROWN" OR EQUAL & APPROVED				
Ironmongery Ferragens	PIVOT AT THE TOP WITH OUTWARD SWINGING SASH AND PUSH OUT LEVER TO MANUFACTURER SPEC´S. GLASS PANELS WITH CASEMENT FASTENER (HANDLE & WEDGE) & SLIDING STAY OPEN OUT ALL IN SATIN CHROME FINISH MOSQUITO SCREEN PANELS WITH CASEMENT FASTENER (HANDLE & WEDGE) IN SATIN CHROME FINISH				
Glazing: Vidros:	3mm CLEAR GLASS				
Glazing Notes:					

NOTES:

1. ALL DOORS WILL BE OF UMBILA OR OF EQUIVALENT WOOD QUALITY & APPROVED
2. ALL OF THE CASEMENT WINDOWS WILL ALSO TAKE ONE MORE CASEMENT LEAF INSIDE IN MOSQUITO NET
3. ALL OPENINGS SIZE TO BE CONFIRMED ON SITE BEFORE MANUFACTURING
4. SHOP DRAWINGS TO BE APPROVED BY ARCHITECT BEFORE MANUFACTURING
5. REFER TO WINDOW & DOOR SCHEDULE KEY PLAN

ESTE DESENHO É PARA SER LIDO EM CONJUNTO COM:

THIS DRAWING IS TO BE READ IN CONJUCTION WITH:

ARCHITECTURAL
EA-MZ-CI0100-WOR-E05-01601-01
EA-MZ-CI0100-WOR-E05-01607-01
EA-MZ-CI0100-WOR-E05-01610-01
EA-MZ-CI0100-WOR-E05-00150-01
EA-MZ-CI0100-WOR-E05-01614-01

ISSUED FOR CONSTRUCTION

WorleyParsons RSA retains the copyright in all intellectual property, including designs and/or documents prepared in terms of this appointment for the project covered by the appointment. The client may use the designs and/or documents for the sole purpose of their intended use on this project only subject to payment for the design having been received. Use for any other purpose, whether or not the design and/or documents have been paid for constitutes an infringement of copyright, and all rights are reserved.

All dimensions must be verified on site before the works commence. Refer any discrepancies to the Engineer.

Copyright reserved

REVISIONS

NO.	DATE	CHK	DONE BY	DESCRIPTION
A	21/07/15	MM	AP	ISSUED INTERNAL REVIEW
B	21/07/15	MM	AP	ISSUED FOR DETAIL DESIGN
C	21/07/15	MM	AP	ISSUED FOR SQUAD CHECK
D	01/10/15	MM	AP	ISSUED FOR CLIENT REVIEW
E	16/11/15	MM	AP	ISSUED CLIENT APPROVAL
0	25/11/15	MM	AP	ISSUED FOR CONSTRUCTION

WorleyParsons
resources & energy
39 MELROSE BOULEVARD, MELROSE ARCH, JOHANNESBURG
P.O. Box 61232, MARSHALLTOWN, 2107
TEL: +27 (0)11 218 3000
FAX: +27(0)11 218 3100
www.worleyparsons.com
WorleyParsons RSA (Pty) Ltd.

MESCH arquitectos

CLIENT

MOZAMBIQUE GAS DEVELOPMENT PROJECT

Anadarko Moçambique Área 1, Lda

PROJECT
AMA 1
RESETTLEMENT
VILLAGE

DRAWING DESCRIPTION
CASA DE REASSENTAMENTO - MAPA DE VÃOS 3

RESETTLEMENT HOUSE - WINDOW & DOOR SCHEDULE 3

SCALE	DATE
A3@ 1:50	NOV 2015

DRAWING NUMBER:	REV Nº
C00290-00-AR-SCH-0084	0

ANADARKO DRAWING NUMBER:
EA-MZ-CI0100-WOR-E05-01614-01

ESTE DESENHO É PARA SER LIDO EM CONJUNTO COM:

THIS DRAWING IS TO BE READ IN CONJUCTION WITH:

ARCHITECTURAL
EA-MZ-CI0100-WOR-E04-01604-01
EA-MZ-CI0100-WOR-E05-00150-01

STRUCTURAL
EA-MZ-CI0100-WOR-E04-00001-01
EA-MZ-CI0100-WOR-E04-00002-01
EA-MZ-CI0100-WOR-E05-00010-01
EA-MZ-CI0100-WOR-E05-00001-01
EA-MZ-CI0100-WOR-E05-00002-01
EA-MZ-CI0100-WOR-E05-00003-01

WATER
EA-MZ-CI0100-WOR-E05-00120-01

ELECTRICAL
EA-MZ-CI0000-WOR-E02-00002-01
EA-MZ-CI0000-WOR-E02-00002-02

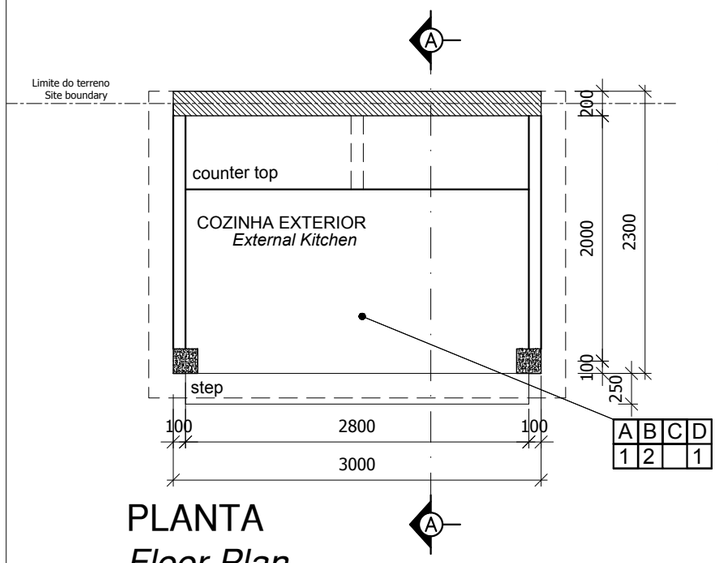

PLANTA
Floor Plan
ESCALA/Scale 1:50

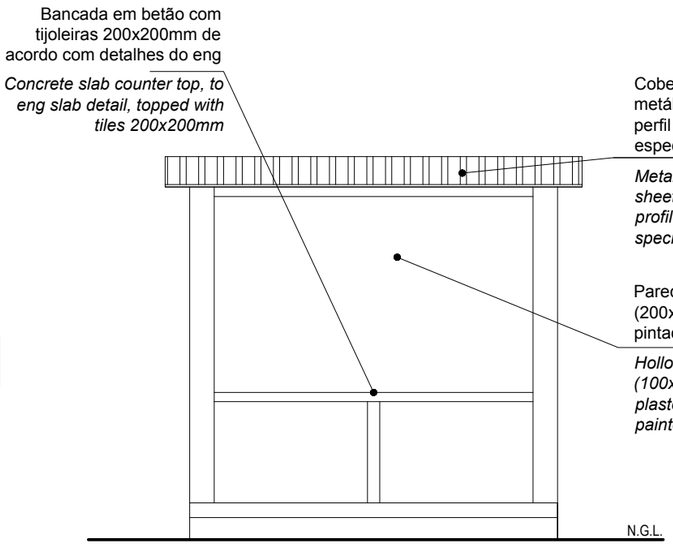

ALÇADO FRONTAL
Front Elevation
ESCALA/Scale 1:50

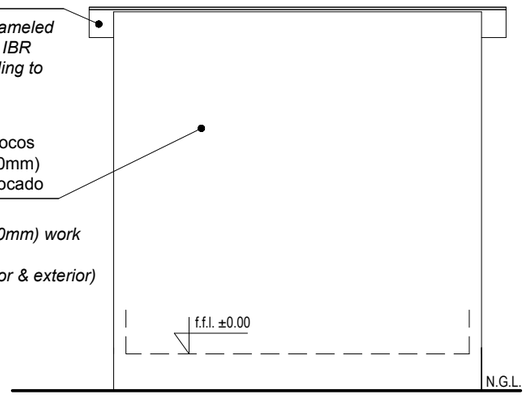

ALÇADO POSTERIOR
Back Elevation
ESCALA/Scale 1:50

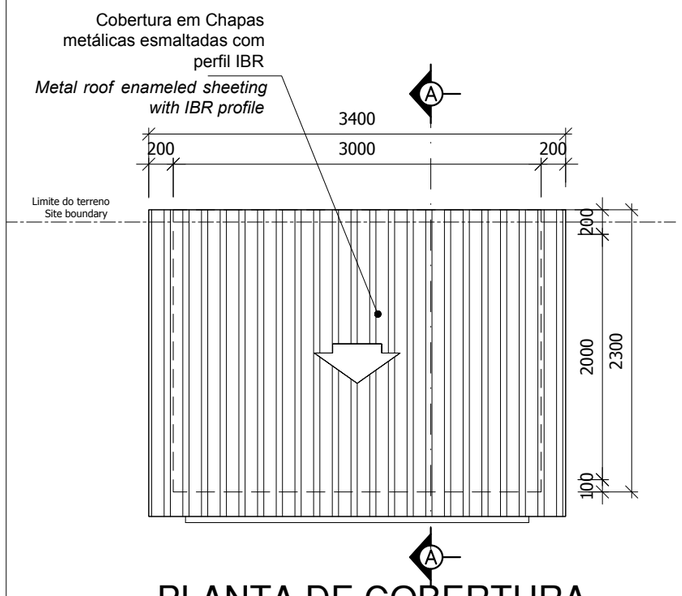

PLANTA DE COBERTURA
Roof Plan
ESCALA/Scale 1:50

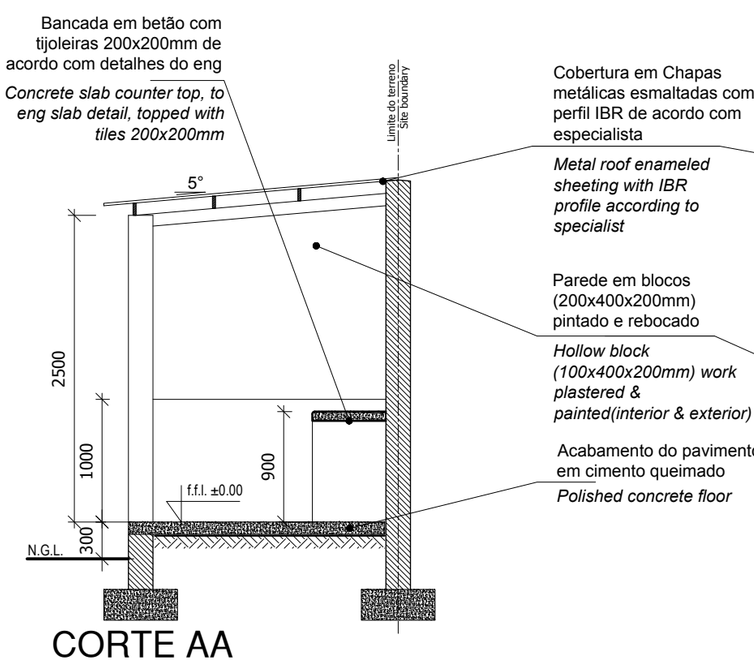

CORTE AA
Section AA
ESCALA/Scale 1:50

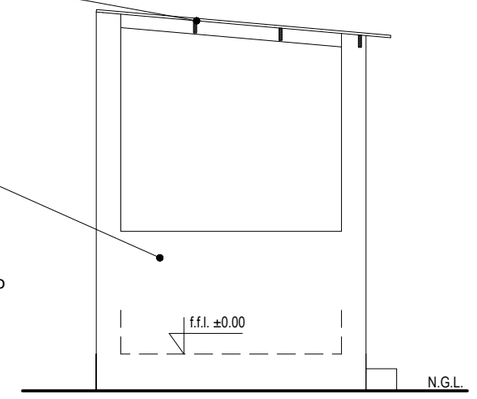

ALÇADO LATERAL
Side Elevation
ESCALA/Scale 1:50

ISSUED FOR CONSTRUCTION

WorleyParsons RSA retains the copyright in all intellectual property, including designs and/or documents prepared in terms of this appointment for the project covered by the appointment. The client may use the designs and/or documents for the sole purpose of their intended use on this project only subject to payment for the design having been received. Use for any other purpose, whether or not the design and/or documents have been paid for constitutes an infringement of copyright, and all rights are reserved.

All dimensions must be verified on site before the works commence. Refer any discrepancies to the Engineer.

Copyright reserved

REVISIONS

NO.	DATE	CHK	DONE BY	DESCRIPTION
A	21/07/15	MM	AP	ISSUED INTERNAL REVIEW
B	21/07/15	MM	AP	ISSUED FOR DETAIL DESIGN
C	21/07/15	MM	AP	ISSUED FOR SQUAD CHECK
D	01/10/15	MM	AP	ISSUED FOR CLIENT REVIEW
E	16/11/15	MM	AP	ISSUED CLIENT APPROVAL
0	25/11/15	MM	AP	ISSUED FOR CONSTRUCTION

WorleyParsons
resources & energy
39 MELROSE BOULEVARD, MELROSE ARCH, JOHANNESBURG
P.O. Box 61232, MARSHALLTOWN, 2107
TEL: +27 (0)11 218 3000
FAX: +27(0)11 218 3100
www.worleyparsons.com
WorleyParsons RSA (Pty) Ltd.

MESCH arquitectos

CLIENT

MOZAMBIQUE GAS DEVELOPMENT PROJECT

Anadarko Moçambique Área 1, Lda

PROJECT
AMA 1
RESETTLEMENT
VILLAGE

DRAWING DESCRIPTION
CASA DE REASSENTAMENTO - POMENORES COZINHA EXTERIOR
RESETTLEMENT HOUSE - EXTERNAL KITCHEN DETAILS

SCALE	DATE
A3@ 1:50	NOV 2015

DRAWING NUMBER:	REV Nº
C00290-00-AR-DRD-0118-001	0

ANADARKO DRAWING NUMBER:
EA-MZ-CI0100-WOR-E05-01613-01

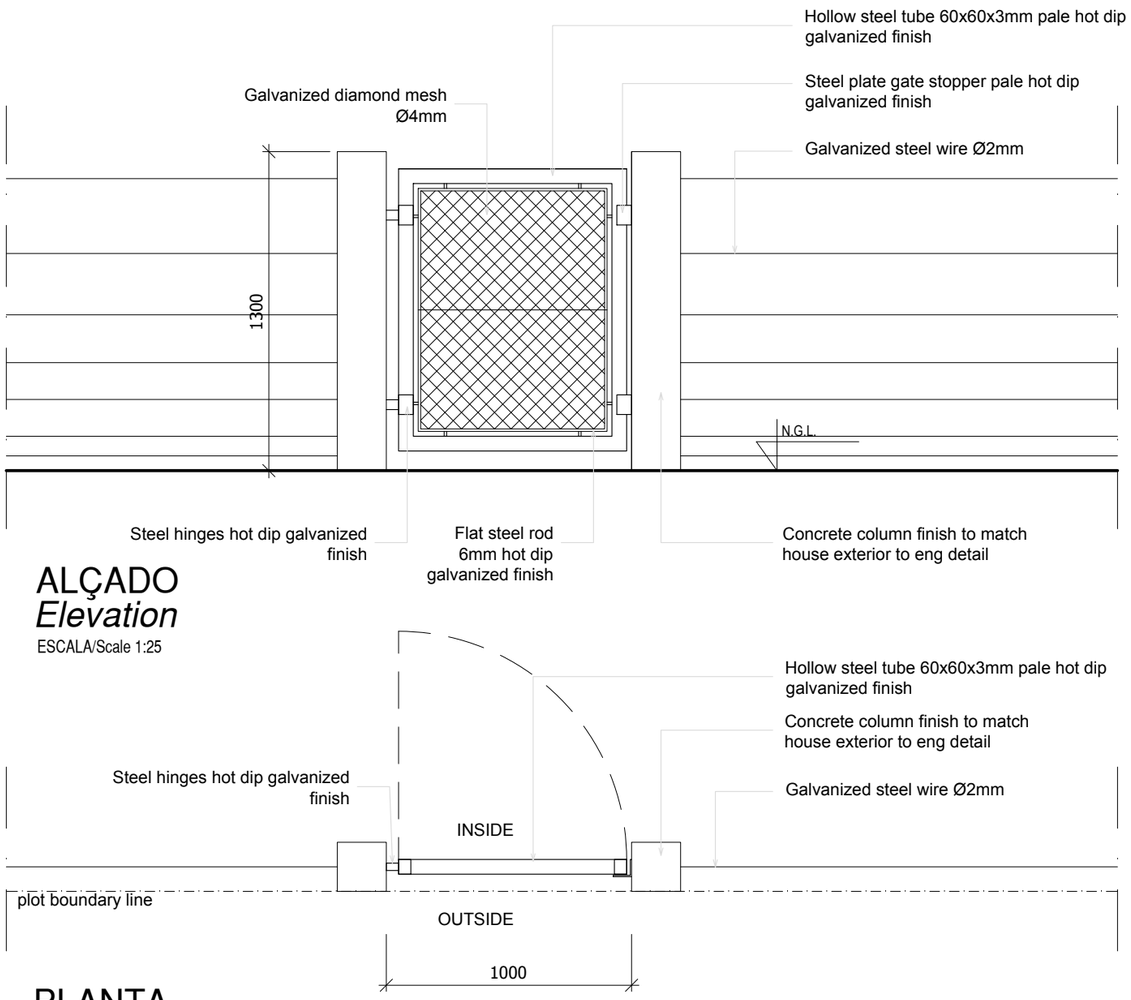

ALÇADO
Elevation
ESCALA/Scale 1:25

PLANTA
Plan
ESCALA/Scale 1:25

ESTE DESENHO É PARA SER LIDO EM CONJUNTO COM:

THIS DRAWING IS TO BE READ IN CONJUCTION WITH:

ARCHITECTURAL
EA-MZ-CI0100-WOR-E04-01604-01
EA-MZ-CI0100-WOR-E05-00150-01

STRUCTURAL
EA-MZ-CI0100-WOR-E04-00001-01
EA-MZ-CI0100-WOR-E04-00002-01
EA-MZ-CI0100-WOR-E05-00010-01
EA-MZ-CI0100-WOR-E05-00001-01
EA-MZ-CI0100-WOR-E05-00002-01
EA-MZ-CI0100-WOR-E05-00003-01

NOTA:
TODAS A DIMENÇÕES E PORMENORES PARA CONSULTAR DESENHOS DE ENG.

NOTE:
ALL DIMENSIONS AND DETAILS REFER TO ENG. DRAWINGS

ISSUED FOR CONSTRUCTION

WorleyParsons RSA retains the copyright in all intellectual property, including designs and/or documents prepared in terms of this appointment for the project covered by the appointment. The client may use the designs and/or documents for the sole purpose of their intended use on this project only subject to payment for the design having been received. Use for any other purpose, whether or not the design and/or documents have been paid for constitutes an infringement of copyright, and all rights are reserved.

All dimensions must be verified on site before the works commence. Refer any discrepancies to the Engineer.

Copyright reserved

REVISIONS

NO.	DATE	CHK	DONE BY	DESCRIPTION
A	21/07/15	MM	AP	ISSUED INTERNAL REVIEW
B	21/07/15	MM	AP	ISSUED FOR DETAIL DESIGN
C	21/07/15	MM	AP	ISSUED FOR SQUAD CHECK
D	01/10/15	MM	AP	ISSUED FOR CLIENT REVIEW
E	16/11/15	MM	AP	ISSUED CLIENT APPROVAL
0	25/11/15	MM	AP	ISSUED FOR CONSTRUCTION

WorleyParsons
resources & energy
39 MELROSE BOULEVARD, MELROSE ARCH, JOHANNESBURG
P.O. Box 61232, MARSHALLTOWN, 2107
TEL: +27 (0)11 218 3000
FAX: +27(0)11 218 3100
www.worleyparsons.com
WorleyParsons RSA (Pty) Ltd.

MESCH arquitectos

CLIENT

MOZAMBIQUE GAS DEVELOPMENT PROJECT

Anadarko Moçambique Área 1, Lda

PROJECT
AMA 1
RESETTLEMENT
VILLAGE

DRAWING DESCRIPTION
CASA DE REASSENTAMENTO - PORMENORES DO PORTÃO

RESETTLEMENT HOUSE - GATE DETAILS

SCALE	DATE
A3@ 1:25	NOV 2015

DRAWING NUMBER:	REV Nº
C00290-00-AR-DRD-0117-001	0

ANADARKO DRAWING NUMBER:
EA-MZ-CI0100-WOR-E05-01612-01

ESTE DESENHO É PARA SER LIDO EM CONJUNTO COM:

THIS DRAWING IS TO BE READ IN CONJUCTION WITH:

ARCHITECTURAL
EA-MZ-CI0100-WOR-E04-01604-01
EA-MZ-CI0100-WOR-E05-00150-01

STRUCTURAL
EA-MZ-CI0100-WOR-E05-00058-01

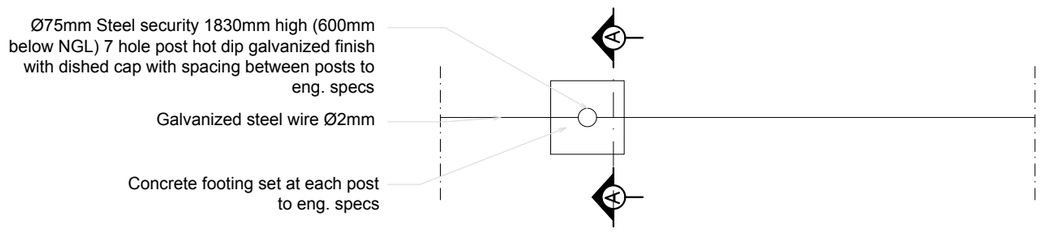

PLANTA
Plan
ESCALA/Scale 1:25

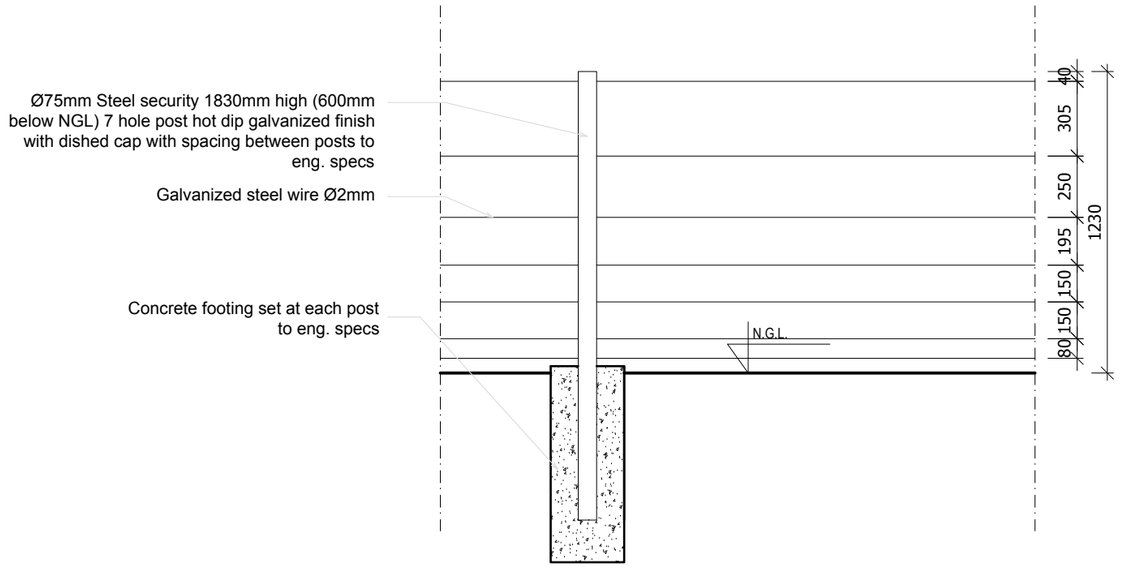

ALÇADO
Elevation
ESCALA/Scale 1:25

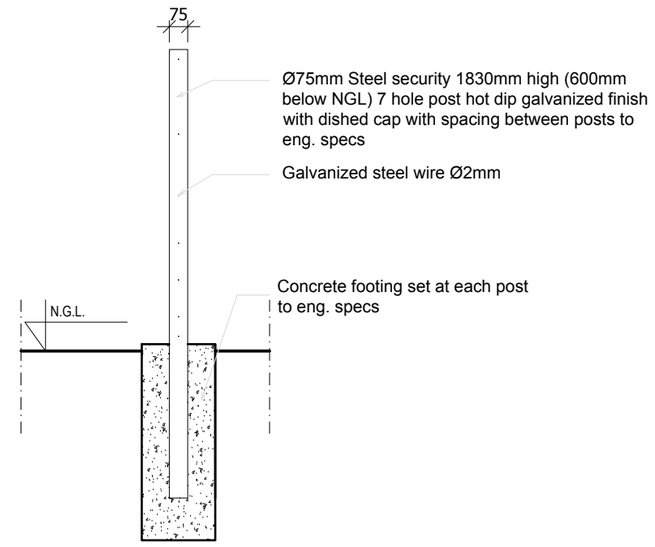

CORTE A-A
Section A-A
ESCALA/Scale 1:25

NOTA:
TODAS A DIMENÇÕES E PORMENORES PARA CONSULTAR DESENHOS DE ENG.

NOTE:
ALL DIMENSIONS AND DETAILS REFER TO ENG. DRAWINGS

ISSUED FOR CONSTRUCTION

WorleyParsons RSA retains the copyright in all intellectual property, including designs and/or documents prepared in terms of this appointment for the project covered by the appointment. The client may use the designs and/or documents for the sole purpose of their intended use on this project only subject to payment for the design having been received. Use for any other purpose, whether or not the design and/or documents have been paid for constitutes an infringement of copyright, and all rights are reserved.

All dimensions must be verified on site before the works commence. Refer any discrepancies to the Engineer.

Copyright reserved

REVISIONS

NO.	DATE	CHK	DONE BY	DESCRIPTION
A	21/07/15	MM	AP	ISSUED INTERNAL REVIEW
B	21/07/15	MM	AP	ISSUED FOR DETAIL DESIGN
C	21/07/15	MM	AP	ISSUED FOR SQUAD CHECK
D	01/10/15	MM	AP	ISSUED FOR CLIENT REVIEW
E	16/11/15	MM	AP	ISSUED CLIENT APPROVAL
0	25/11/15	MM	AP	ISSUED FOR CONSTRUCTION

WorleyParsons
resources & energy
39 MELROSE BOULEVARD, MELROSE ARCH, JOHANNESBURG
P.O. Box 61232, MARSHALLTOWN, 2107
TEL: +27 (0)11 218 3000
FAX: +27(0)11 218 3100
www.worleyparsons.com
WorleyParsons RSA (Pty) Ltd.

MESCH arquitectos

CLIENT

MOZAMBIQUE GAS DEVELOPMENT PROJECT

Anadarko Moçambique Área 1, Lda

PROJECT
AMA 1
RESETTLEMENT
VILLAGE

DRAWING DESCRIPTION
CASA DE REASSENTAMENTO - PORMENORES DA VEDAÇÃO

RESETTLEMENT HOUSE - FENCE DETAILS

SCALE	DATE
A3@ 1:25	NOV 2015

DRAWING NUMBER:	REV Nº
C00290-00-AR-DRD-0116-001	0

ANADARKO DRAWING NUMBER:
EA-MZ-CI0100-WOR-E05-01611-01

WINDOWS & DOOR SCHEDULE/ Mapa de vãos: Janelas & Portas

ALL DIMENSIONS AND LEVELS ARE TO BE CHECKED/VERIFIED ON SITE AND ANY DISCREPENCIES ARE TO BE REPORTED TO THE ARCHITECT
TODAS DIMENSÕES E NÍVEIS DEVEM SER VERIFICADOS NA OBRA E QUALQUER DISCREPÂNCIA DEVERÁ SER COMUNICADA AO ARQUITECTO

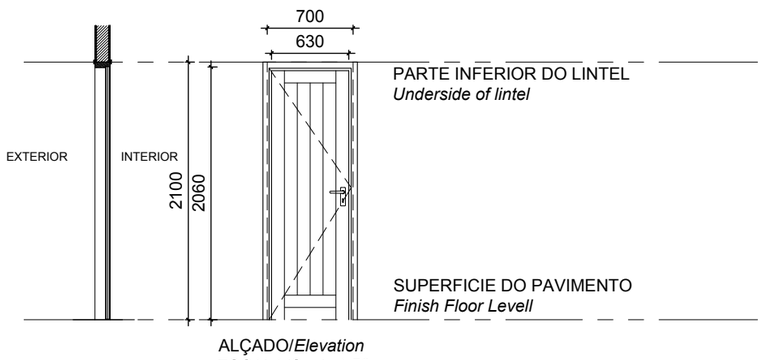

ALÇADO/*Elevation*
ESCALA/*Scale* 1:50

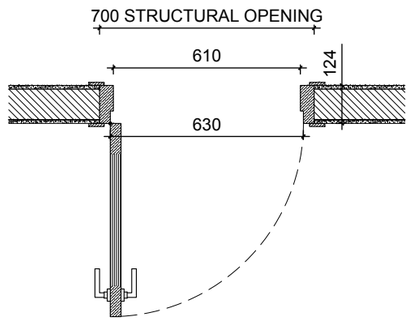

PLANTA/*Plan*
ESCALA/*Scale* 1:20

Code: Codigo:	D3	**Position:** Localização:	Toilet Shower	**Qty:** Qtd:	3
Frame: Aro:	WOOD FRAME TO MANUFACTURERS SPECS SEMI SOLID SLATTED TIMBER DOOR DOORS TO BE TYPE PD60 - from SWARTLAND OR SIMILAR				
Finish: Acabamentos:	1 COAT PRIMER 1 COAT UNDERCOAT AND 2 COATS PLASCON ENAMEL DOORS & TRIMS COLOUR "LIGHT BROWN" OR EQUAL & APPROVED				
Ironmongery Ferragens	102 x 75 x 3mm PVD DOUBLE BALL BEARING BUTT HINGE X 3 PER DOOR LOCK (3 LEAVER) WITH HANDLES POLISHED CHROME FINISH SIMILAR TO "UNION" PROTEA CB612 HANDLE				
Glazing: Vidros:					
Glazing Notes:					

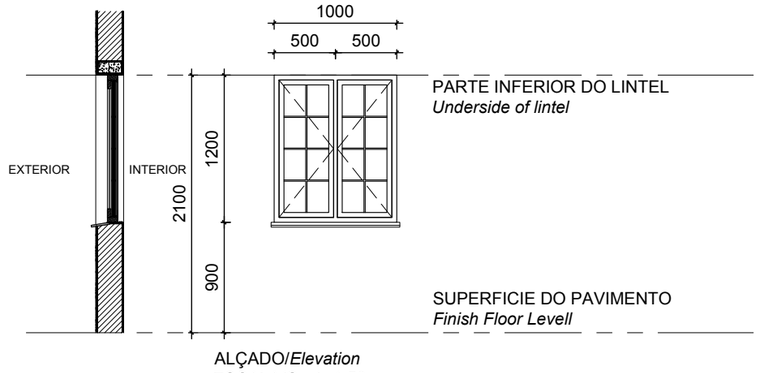

ALÇADO/*Elevation*
ESCALA/*Scale* 1:50

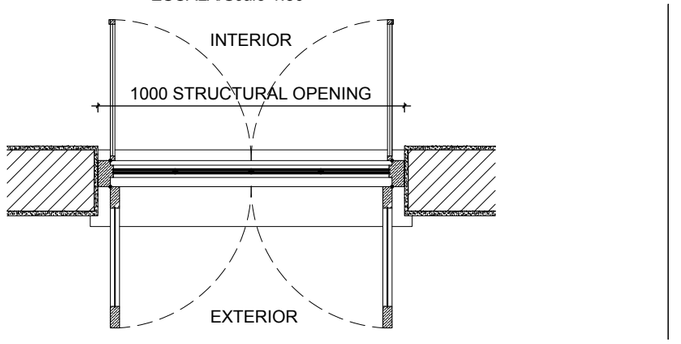

PLANTA/*Plan*
ESCALA/*Scale* 1:20

Code: Codigo:	W1	**Position:** Localização:	Bedrooms Livingroom & Kitchen	**Qty:** Qtd:	5
Frame: Aro:	WOOD FRAME TO MANUFACTURERS SPECS SOLID TIMBER WINDOW , 2 GLASS PANELS ON OUTSIDE & 2 MOSQUITO SCREEN PANELS ON THE INSIDE WITH ELECTROPLATED 10 mm ROUND B/BARS WINDOW TO BE TO TYPE ZWCM - from SWARTLAND OR SIMILAR				
Finish: Acabamentos:	1 COAT PRIMER 1 COAT UNDERCOAT AND 2 COATS PLASCON ENAMEL DOORS & TRIMS COLOUR "LIGHT BROWN" OR EQUAL & APPROVED				
Ironmongery Ferragens	102 x 75 x 3mm PVD DOUBLE BALL BEARING BUTT HINGE X 2 PER WINDOW PANEL GLASS PANELS WITH CASEMENT FASTENER (HANDLE & WEDGE) & SLIDING STAY OPEN OUT ALL IN SATIN CHROME FINISH MOSQUITO SCREEN PANELS WITH CASEMENT FASTENER (HANDLE & WEDGE) IN SATIN CHROME FINISH				
Glazing: Vidros:	3mm CLEAR GLASS				
Glazing Notes:					

NOTES:

1. ALL DOORS WILL BE OF UMBILA OR OF EQUIVALENT WOOD QUALITY & APPROVED
2. ALL OF THE CASEMENT WINDOWS WILL ALSO TAKE ONE MORE CASEMENT LEAF INSIDE IN MOSQUITO NET
3. ALL OPENINGS SIZE TO BE CONFIRMED ON SITE BEFORE MANUFACTURING
4. SHOP DRAWINGS TO BE APPROVED BY ARCHITECT BEFORE MANUFACTURING
5. REFER TO WINDOW & DOOR SCHEDULE KEY PLAN

ESTE DESENHO É PARA SER LIDO EM CONJUNTO COM:

THIS DRAWING IS TO BE READ IN CONJUCTION WITH:

ARCHITECTURAL
EA-MZ-CI0100-WOR-E05-01601-01
EA-MZ-CI0100-WOR-E05-01607-01
EA-MZ-CI0100-WOR-E05-01610-01
EA-MZ-CI0100-WOR-E05-00150-01
EA-MZ-CI0100-WOR-E05-01614-01

ISSUED FOR CONSTRUCTION

WorleyParsons RSA retains the copyright in all intellectual property, including designs and/or documents prepared in terms of this appointment for the project covered by the appointment. The client may use the designs and/or documents for the sole purpose of their intended use on this project only subject to payment for the design having been received. Use for any other purpose, whether or not the design and/or documents have been paid for constitutes an infringement of copyright, and all rights are reserved.

All dimensions must be verified on site before the works commence. Refer any discrepancies to the Engineer.

Copyright reserved

REVISIONS

NO.	DATE	CHK	DONE BY	DESCRIPTION
A	21/07/15	MM	AP	ISSUED INTERNAL REVIEW
B	21/07/15	MM	AP	ISSUED FOR DETAIL DESIGN
C	21/07/15	MM	AP	ISSUED FOR SQUAD CHECK
D	01/10/15	MM	AP	ISSUED FOR CLIENT REVIEW
E	16/11/15	MM	AP	ISSUED CLIENT APPROVAL
0	25/11/15	MM	AP	ISSUED FOR CONSTRUCTION

WorleyParsons
resources & energy
39 MELROSE BOULEVARD, MELROSE ARCH, JOHANNESBURG
P.O. Box 61232, MARSHALLTOWN, 2107
TEL: +27 (0)11 218 3000
FAX: +27(0)11 218 3100
www.worleyparsons.com
WorleyParsons RSA (Pty) Ltd.

MESCH arquitectos

CLIENT

MOZAMBIQUE GAS DEVELOPMENT PROJECT

Anadarko Moçambique Área 1, Lda

PROJECT
AMA 1
RESETTLEMENT
VILLAGE

DRAWING DESCRIPTION
CASA DE REASSENTAMENTO - MAPA DE VÃOS 2

RESETTLEMENT HOUSE - WINDOW & DOOR SCHEDULE 2

SCALE	DATE
A3@ 1:50	NOV 2015

DRAWING NUMBER:	REV Nº
C00290-00-AR-SCH-0083	0

ANADARKO DRAWING NUMBER:
EA-MZ-CI0100-WOR-E05-01610-01

WINDOWS & DOOR SCHEDULE/ Mapa de vãos: Janelas & Portas

ALL DIMENSIONS AND LEVELS ARE TO BE CHECKED/VERIFIED ON SITE AND ANY DISCREPENCIES ARE TO BE REPORTED TO THE ARCHITECT
TODAS DIMENSÕES E NÍVEIS DEVEM SER VERIFICADOS NA OBRA E QUALQUER DISCREPÂNCIA DEVERÁ SER COMUNICADA AO ARQUITECTO

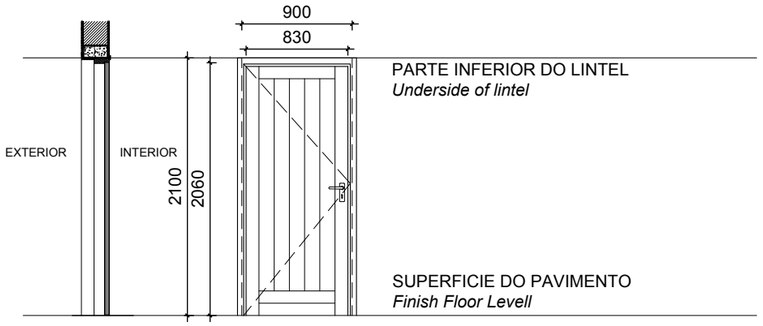

ALÇADO/*Elevation*
ESCALA/*Scale* 1:50

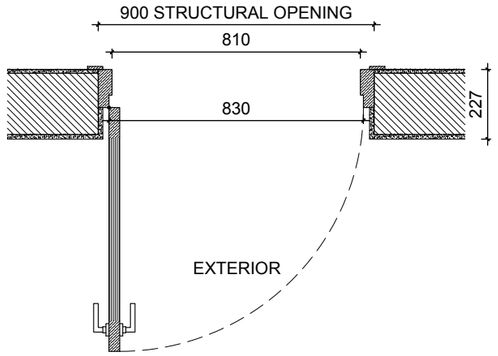

PLANTA/*Plan*
ESCALA/*Scale* 1:20

Code: Codigo:	D1	**Position:** Localização:	Livingroom Kitchen	**Qty:** Qtd:	3
Frame: Aro:	WOOD FRAME TO MANUFACTURERS SPECS SEMI SOLID SLATTED TIMBER DOOR DOORS TO BE TYPE PD60 - from SWARTLAND OR SIMILAR				
Finish: Acabamentos:	1 COAT PRIMER 1 COAT UNDERCOAT AND 2 COATS PLASCON ENAMEL DOORS & TRIMS COLOUR "LIGHT BROWN" OR EQUAL & APPROVED				
Ironmongery Ferragens	102 x 75 x 3mm PVD DOUBLE BALL BEARING BUTT HINGE X 3 PER DOOR LOCK (3 LEAVER) WITH HANDLES POLISHED CHROME FINISH SIMILAR TO YALE GOWER HANDLE				
Glazing: Vidros:					
Glazing Notes:					

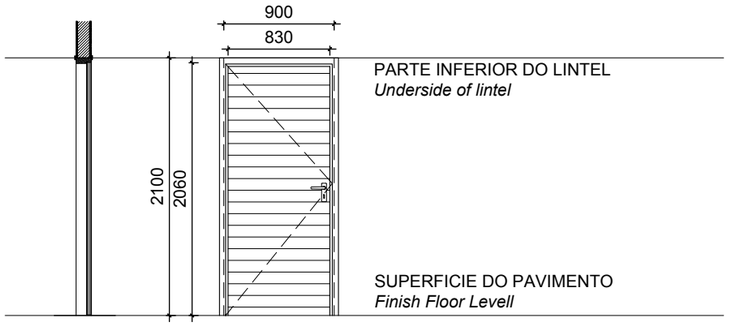

ALÇADO/*Elevation*
ESCALA/*Scale* 1:50

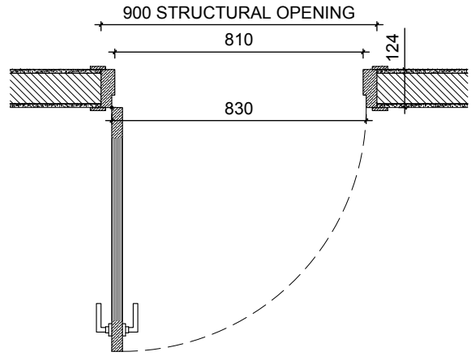

PLANTA/*Plan*
ESCALA/*Scale* 1:20

Code: Codigo:	D2	**Position:** Localização:	INTERNAL DOOR Kitchen/Bedrooms	**Qty:** Qtd:	4
Frame: Aro:	WOOD FRAME TO MANUFACTURERS SPECS SEMI SOLID TIMBER DOOR WITH HORIZONTAL GROOVES DOORS TO BE TYPE ZKID - from SWARTLAND OR SIMILAR				
Finish: Acabamentos:	3 COATS CLEAR VARNISH				
Ironmongery Ferragens	102 x 75 x 3mm PVD DOUBLE BALL BEARING BUTT HINGE X 3 PER DOOR LOCK (2 LEAVER) WITH HANDLES POLISHED CHROME FINISH SIMILAR TO YALE GOWER HANDLE				
Glazing: Vidros:					
Glazing Notes:					

NOTES:

1. ALL DOORS WILL BE OF UMBILA OR OF EQUIVALENT WOOD QUALITY & APPROVED BY CLIENT
2. ALL OF THE CASEMENT WINDOWS WILL ALSO TAKE ONE MORE CASEMENT LEAF INSIDE IN MOSQUITO NET
3. ALL OPENINGS SIZE TO BE CONFIRMED ON SITE BEFORE MANUFACTURING
4. SHOP DRAWINGS TO BE APPROVED BY ARCHITECT BEFORE MANUFACTURING
5. REFER TO WINDOW & DOOR SCHEDULE KEY PLAN

ESTE DESENHO É PARA SER LIDO EM CONJUNTO COM:

THIS DRAWING IS TO BE READ IN CONJUCTION WITH:

ARCHITECTURAL
EA-MZ-CI0100-WOR-E05-01601-01
EA-MZ-CI0100-WOR-E05-01607-01
EA-MZ-CI0100-WOR-E05-01610-01
EA-MZ-CI0100-WOR-E05-00150-01
EA-MZ-CI0100-WOR-E05-01614-01

ISSUED FOR CONSTRUCTION

WorleyParsons RSA retains the copyright in all intellectual property, including designs and/or documents prepared in terms of this appointment for the project covered by the appointment. The client may use the designs and/or documents for the sole purpose of their intended use on this project only subject to payment for the design having been received. Use for any other purpose, whether or not the design and/or documents have been paid for constitutes an infringement of copyright, and all rights are reserved.

All dimensions must be verified on site before the works commence. Refer any discrepancies to the Engineer.

Copyright reserved

REVISIONS

NO.	DATE	CHK	DONE BY	DESCRIPTION
A	21/07/15	MM	AP	ISSUED INTERNAL REVIEW
B	21/07/15	MM	AP	ISSUED FOR DETAIL DESIGN
C	21/07/15	MM	AP	ISSUED FOR SQUAD CHECK
D	01/10/15	MM	AP	ISSUED FOR CLIENT REVIEW
E	16/11/15	MM	AP	ISSUED CLIENT APPROVAL
0	25/11/15	MM	AP	ISSUED FOR CONSTRUCTION

WorleyParsons
resources & energy
39 MELROSE BOULEVARD, MELROSE ARCH, JOHANNESBURG
P.O. Box 61232, MARSHALLTOWN, 2107
TEL: +27 (0)11 218 3000
FAX: +27(0)11 218 3100
www.worleyparsons.com
WorleyParsons RSA (Pty) Ltd.

MESCH arquitectos

CLIENT

MOZAMBIQUE GAS DEVELOPMENT PROJECT

Anadarko Moçambique Área 1, Lda

PROJECT
AMA 1
RESETTLEMENT
VILLAGE

DRAWING DESCRIPTION
CASA DE REASSENTAMENTO - MAPA DE VÃOS 1

RESETTLEMENT HOUSE - WINDOW & DOOR SCHEDULE 1

SCALE	DATE
A3@ 1:50	NOV 2015

DRAWING NUMBER:	REV Nº
C00290-00-AR-SCH-0082	0

ANADARKO DRAWING NUMBER:
EA-MZ-CI0100-WOR-E05-01609-01

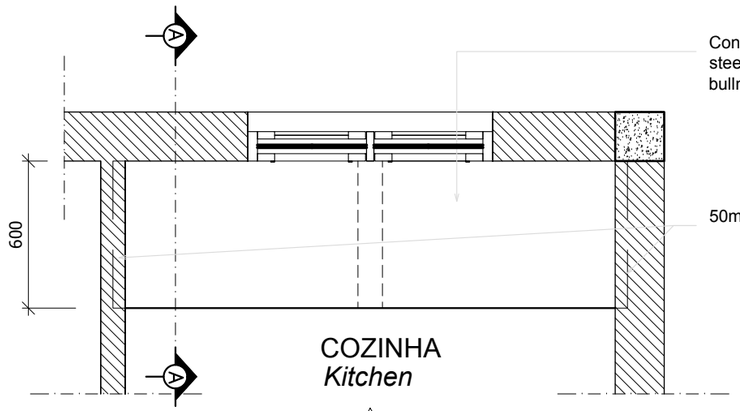

PLANTA
Plan
ESCALA/Scale 1:25

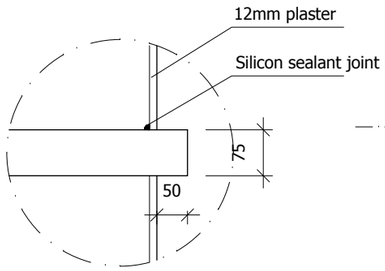

DETALHE A
Detail A
ESCALA/Scale 1:10

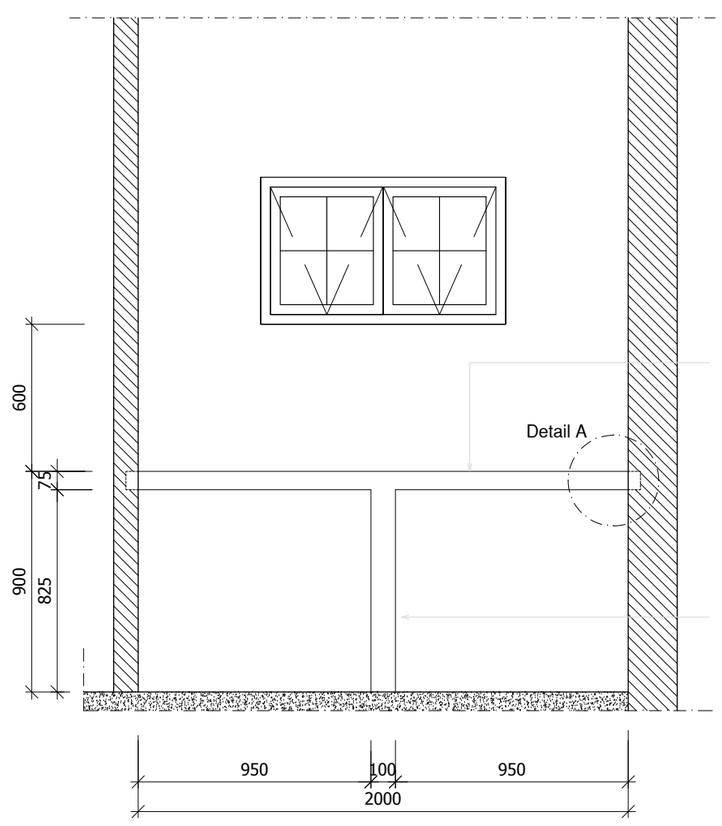

ALÇADO
Elevation
ESCALA/Scale 1:25

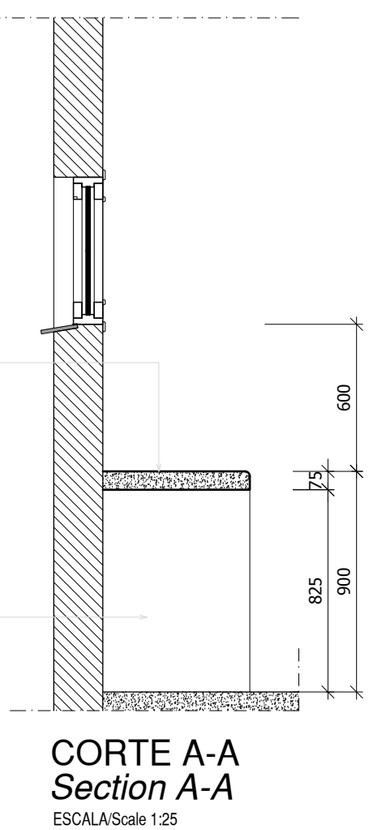

CORTE A-A
Section A-A
ESCALA/Scale 1:25

ESTE DESENHO É PARA SER LIDO EM CONJUNTO COM:

THIS DRAWING IS TO BE READ IN CONJUCTION WITH:

ARCHITECTURAL
EA-MZ-CI0100-WOR-E04-01605-01
EA-MZ-CI0100-WOR-E05-01601-01
EA-MZ-CI0100-WOR-E05-00150-01

STRUCTURAL
EA-MZ-CI0100-WOR-E04-00001-01
EA-MZ-CI0100-WOR-E04-00002-01
EA-MZ-CI0100-WOR-E05-00010-01
EA-MZ-CI0100-WOR-E05-00001-01
EA-MZ-CI0100-WOR-E05-00002-01
EA-MZ-CI0100-WOR-E05-00003-01

WATER
EA-MZ-CI0100-WOR-E05-00120-01

ISSUED FOR CONSTRUCTION

WorleyParsons RSA retains the copyright in all intellectual property, including designs and/or documents prepared in terms of this appointment for the project covered by the appointment. The client may use the designs and/or documents for the sole purpose of their intended use on this project only subject to payment for the design having been received. Use for any other purpose, whether or not the design and/or documents have been paid for constitutes an infringement of copyright, and all rights are reserved.

All dimensions must be verified on site before the works commence. Refer any discrepancies to the Engineer.

Copyright reserved

REVISIONS

NO.	DATE	CHK	DONE BY	DESCRIPTION
A	21/07/15	MM	AP	ISSUED INTERNAL REVIEW
B	21/07/15	MM	AP	ISSUED FOR DETAIL DESIGN
C	21/07/15	MM	AP	ISSUED FOR SQUAD CHECK
D	01/10/15	MM	AP	ISSUED FOR CLIENT REVIEW
E	16/11/15	MM	AP	ISSUED CLIENT APPROVAL
0	25/11/15	MM	AP	ISSUED FOR CONSTRUCTION

WorleyParsons
resources & energy
39 MELROSE BOULEVARD, MELROSE ARCH, JOHANNESBURG
P.O. Box 61232, MARSHALLTOWN, 2107
TEL: +27 (0)11 218 3000
FAX: +27(0)11 218 3100
www.worleyparsons.com
WorleyParsons RSA (Pty) Ltd.

MESCH arquitectos

CLIENT

MOZAMBIQUE GAS DEVELOPMENT PROJECT

Anadarko Moçambique Área 1, Lda

PROJECT
AMA 1
RESETTLEMENT
VILLAGE

DRAWING DESCRIPTION
CASA DE REASSENTAMENTO - DETALHES DA BANCA DA COZINHA
RESETTLEMENT HOUSE - KITCHEN COUNTERTOP DETAILS

SCALE	DATE
A3@ 1:50	NOV 2015

DRAWING NUMBER:	REV Nº
C00290-00-AR-DRD-0115-001	0

ANADARKO DRAWING NUMBER:
EA-MZ-CI0100-WOR-E05-01608-01

ESTE DESENHO É PARA SER LIDO EM CONJUNTO COM:

THIS DRAWING IS TO BE READ IN CONJUCTION WITH:

ARCHITECTURAL
EA-MZ-CI0100-WOR-E04-01604-01
EA-MZ-CI0100-WOR-E05-01609-01
EA-MZ-CI0100-WOR-E05-01610-01
EA-MZ-CI0100-WOR-E05-00150-01
EA-MZ-CI0100-WOR-E05-01614-01

STRUCTURAL
EA-MZ-CI0100-WOR-E04-00001-01
EA-MZ-CI0100-WOR-E04-00002-01
EA-MZ-CI0100-WOR-E05-00010-01
EA-MZ-CI0100-WOR-E05-00001-01
EA-MZ-CI0100-WOR-E05-00002-01
EA-MZ-CI0100-WOR-E05-00003-01

WATER
EA-MZ-CI0100-WOR-E05-00120-01

ELECTRICAL
EA-MZ-CI0000-WOR-E02-00002-01
EA-MZ-CI0000-WOR-E02-00002-02

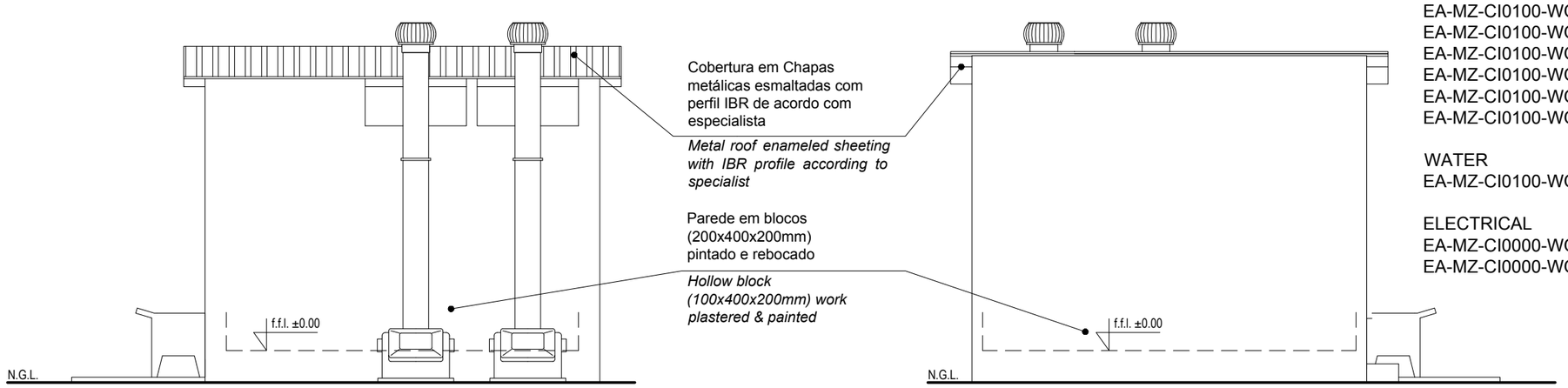

ALÇADO FRONTAL
Front Elevation

ESCALA/Scale 1:50

ALÇADO POSTERIOR
Back Elevation

ESCALA/Scale 1:50

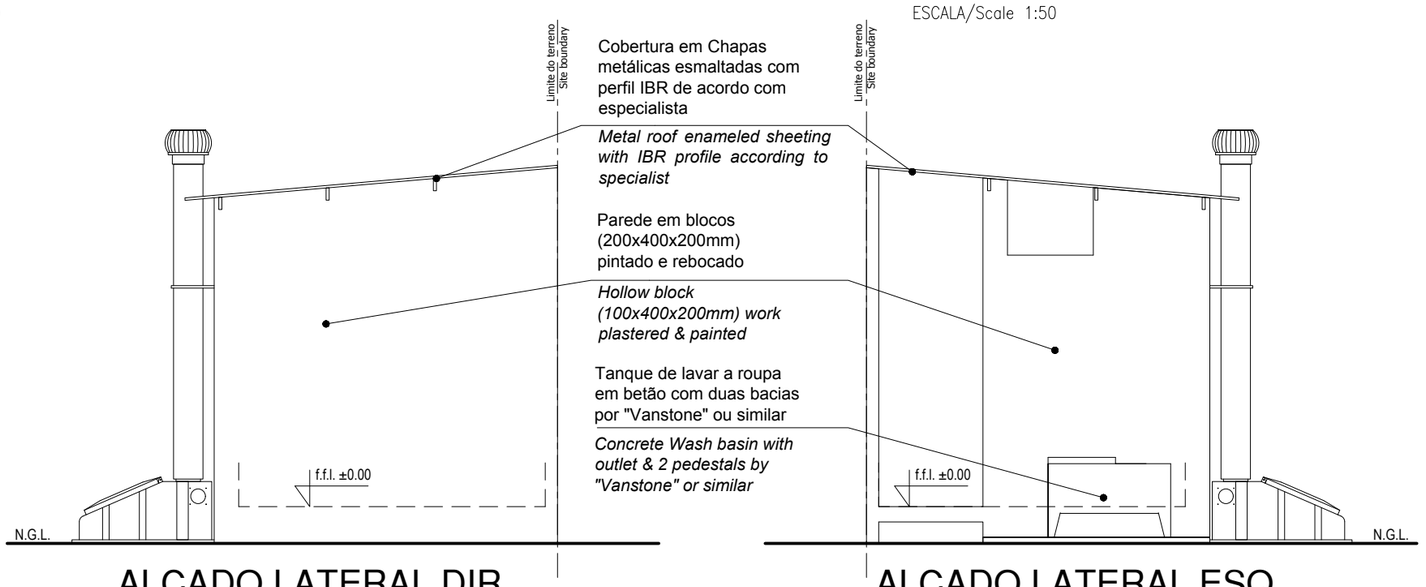

ALÇADO LATERAL DIR.
Right Side Elevation

ESCALA/Scale 1:50

ALÇADO LATERAL ESQ.
Left Side Elevation

ESCALA/Scale 1:50

ISSUED FOR CONSTRUCTION

WorleyParsons RSA retains the copyright in all intellectual property, including designs and/or documents prepared in terms of this appointment for the project covered by the appointment. The client may use the designs and/or documents for the sole purpose of their intended use on this project only subject to payment for the design having been received. Use for any other purpose, whether or not the design and/or documents have been paid for constitutes an infringement of copyright, and all rights are reserved.

All dimensions must be verified on site before the works commence. Refer any discrepancies to the Engineer.

Copyright reserved

REVISIONS

NO.	DATE	CHK	DONE BY	DESCRIPTION
A	21/07/15	MM	AP	ISSUED INTERNAL REVIEW
B	21/07/15	MM	AP	ISSUED FOR DETAIL DESIGN
C	21/07/15	MM	AP	ISSUED FOR SQUAD CHECK
D	01/10/15	MM	AP	ISSUED FOR CLIENT REVIEW
E	16/11/15	MM	AP	ISSUED CLIENT APPROVAL
0	25/11/15	MM	AP	ISSUED FOR CONSTRUCTION

WorleyParsons
resources & energy
39 MELROSE BOULEVARD, MELROSE ARCH, JOHANNESBURG
P.O. Box 61232, MARSHALLTOWN, 2107
TEL: +27 (0)11 218 3000
FAX: +27(0)11 218 3100
www.worleyparsons.com
WorleyParsons RSA (Pty) Ltd.

MESCH arquitectos

CLIENT

MOZAMBIQUE GAS DEVELOPMENT PROJECT

Anadarko Moçambique Área 1, Lda

PROJECT
AMA 1
RESETTLEMENT
VILLAGE

DRAWING DESCRIPTION
CASA DE REASSENTAMENTO - PORMENORES, DUCHE & LATRINA FOLHA 2 DE 2
R.HOUSE - SHOWER & LATRINE DETAILS SHEET 2 OF 2

SCALE	DATE
A3@ 1:50	NOV 2015

DRAWING NUMBER:	REV Nº
C00290-00-AR-DRD-0114-002	0

ANADARKO DRAWING NUMBER:
EA-MZ-CI0100-WOR-E05-01607-02

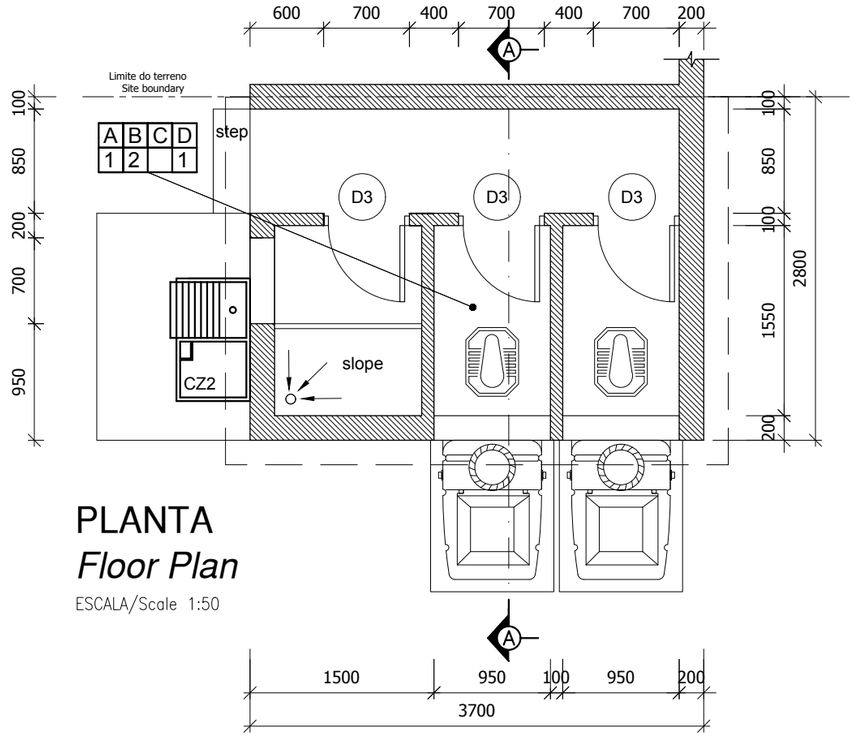

PLANTA
Floor Plan
ESCALA/Scale 1:50

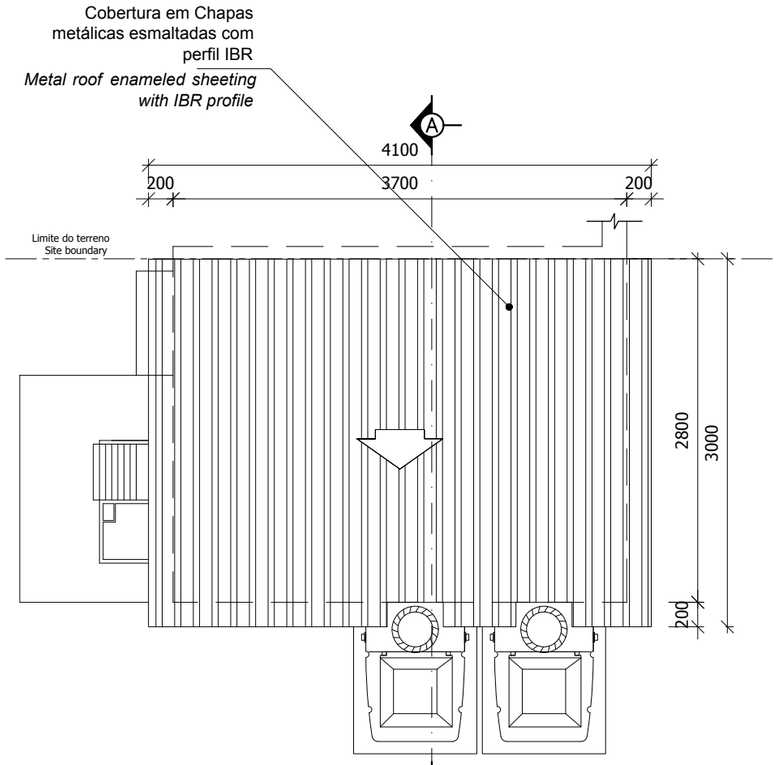

PLANTA DE COBERTURA
Roof Plan
ESCALA/Scale 1:50

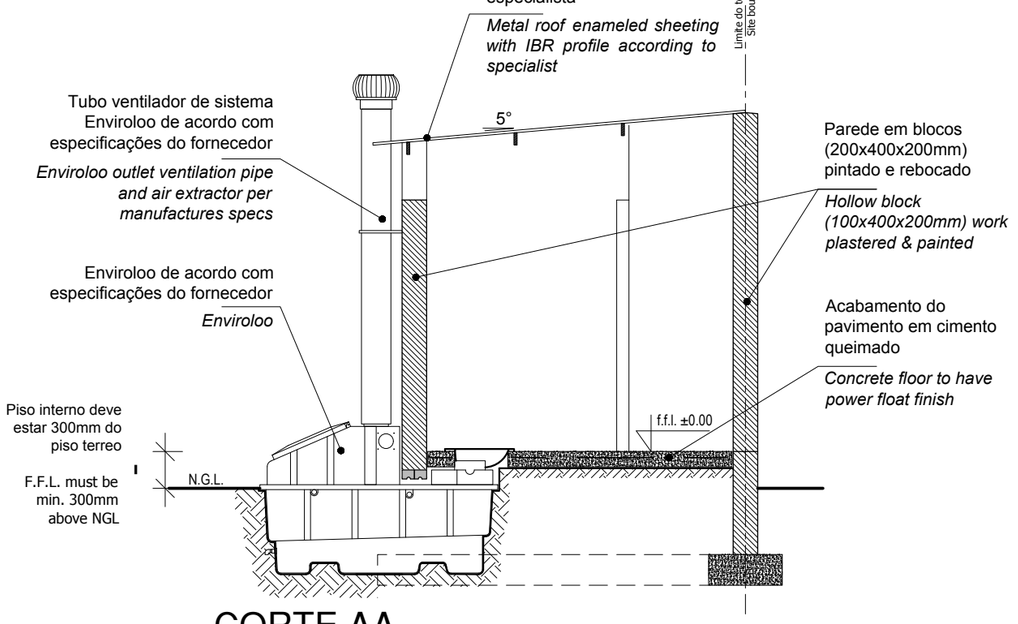

CORTE AA
Section AA
ESCALA/Scale 1:50

ESTE DESENHO É PARA SER LIDO EM CONJUNTO COM:

THIS DRAWING IS TO BE READ IN CONJUCTION WITH:

ARCHITECTURAL
EA-MZ-CI0100-WOR-E04-01604-01
EA-MZ-CI0100-WOR-E05-01609-01
EA-MZ-CI0100-WOR-E05-01610-01
EA-MZ-CI0100-WOR-E05-00150-01
EA-MZ-CI0100-WOR-E05-01614-01

STRUCTURAL
EA-MZ-CI0100-WOR-E04-00001-01
EA-MZ-CI0100-WOR-E04-00002-01
EA-MZ-CI0100-WOR-E05-00010-01
EA-MZ-CI0100-WOR-E05-00001-01
EA-MZ-CI0100-WOR-E05-00002-01
EA-MZ-CI0100-WOR-E05-00003-01

WATER
EA-MZ-CI0100-WOR-E05-00120-01

ELECTRICAL
EA-MZ-CI0000-WOR-E02-00002-01
EA-MZ-CI0000-WOR-E02-00002-02

ISSUED FOR CONSTRUCTION

WorleyParsons RSA retains the copyright in all intellectual property, including designs and/or documents prepared in terms of this appointment for the project covered by the appointment. The client may use the designs and/or documents for the sole purpose of their intended use on this project only subject to payment for the design having been received. Use for any other purpose, whether or not the design and/or documents have been paid for constitutes an infringement of copyright, and all rights are reserved.

All dimensions must be verified on site before the works commence. Refer any discrepancies to the Engineer.

Copyright reserved

REVISIONS

NO.	DATE	CHK	DONE BY	DESCRIPTION
A	21/07/15	MM	AP	ISSUED INTERNAL REVIEW
B	21/07/15	MM	AP	ISSUED FOR DETAIL DESIGN
C	21/07/15	MM	AP	ISSUED FOR SQUAD CHECK
D	01/10/15	MM	AP	ISSUED FOR CLIENT REVIEW
E	16/11/15	MM	AP	ISSUED CLIENT APPROVAL
0	25/11/15	MM	AP	ISSUED FOR CONSTRUCTION

WorleyParsons
resources & energy
39 MELROSE BOULEVARD, MELROSE ARCH, JOHANNESBURG
P.O. Box 61232, MARSHALLTOWN, 2107
TEL: +27 (0)11 218 3000
FAX: +27(0)11 218 3100
www.worleyparsons.com
WorleyParsons RSA (Pty) Ltd.

MESCH arquitectos

CLIENT

MOZAMBIQUE GAS DEVELOPMENT PROJECT

Anadarko
Moçambique Área 1, Lda

PROJECT
AMA 1
RESETTLEMENT
VILLAGE

DRAWING DESCRIPTION
CASA DE REASSENTAMENTO - PORMENORES, DUCHE & LATRINA FOLHA 1 DE 2
R.HOUSE - SHOWER & LATRINE DETAILS SHEET 1 OF 2

SCALE	DATE
A3@ 1:50	NOV 2015

DRAWING NUMBER:	REV Nº
C00290-00-AR-DRD-0114-001	0

ANADARKO DRAWING NUMBER:
EA-MZ-CI0100-WOR-E05-01607-01

ESTE DESENHO É PARA SER LIDO EM CONJUNTO COM:

THIS DRAWING IS TO BE READ IN CONJUCTION WITH:

ARCHITECTURAL
EA-MZ-CI0100-WOR-E04-01605-01
EA-MZ-CI0100-WOR-E04-01602-01
EA-MZ-CI0100-WOR-E05-00100-01
EA-MZ-CI0100-WOR-E05-00001-01
EA-MZ-CI0100-WOR-E05-00002-01
EA-MZ-CI0100-WOR-E05-00003-01

WATER
EA-MZ-CI0100-WOR-E05-00120-01

STRUCTURAL
EA-MZ-CI0100-WOR-E04-00001-01
EA-MZ-CI0100-WOR-E04-00002-01
EA-MZ-CI0100-WOR-E05-00010-01

ELECTRICAL
EA-MZ-CI0000-WOR-E02-00002-01
EA-MZ-CI0000-WOR-E02-00002-02

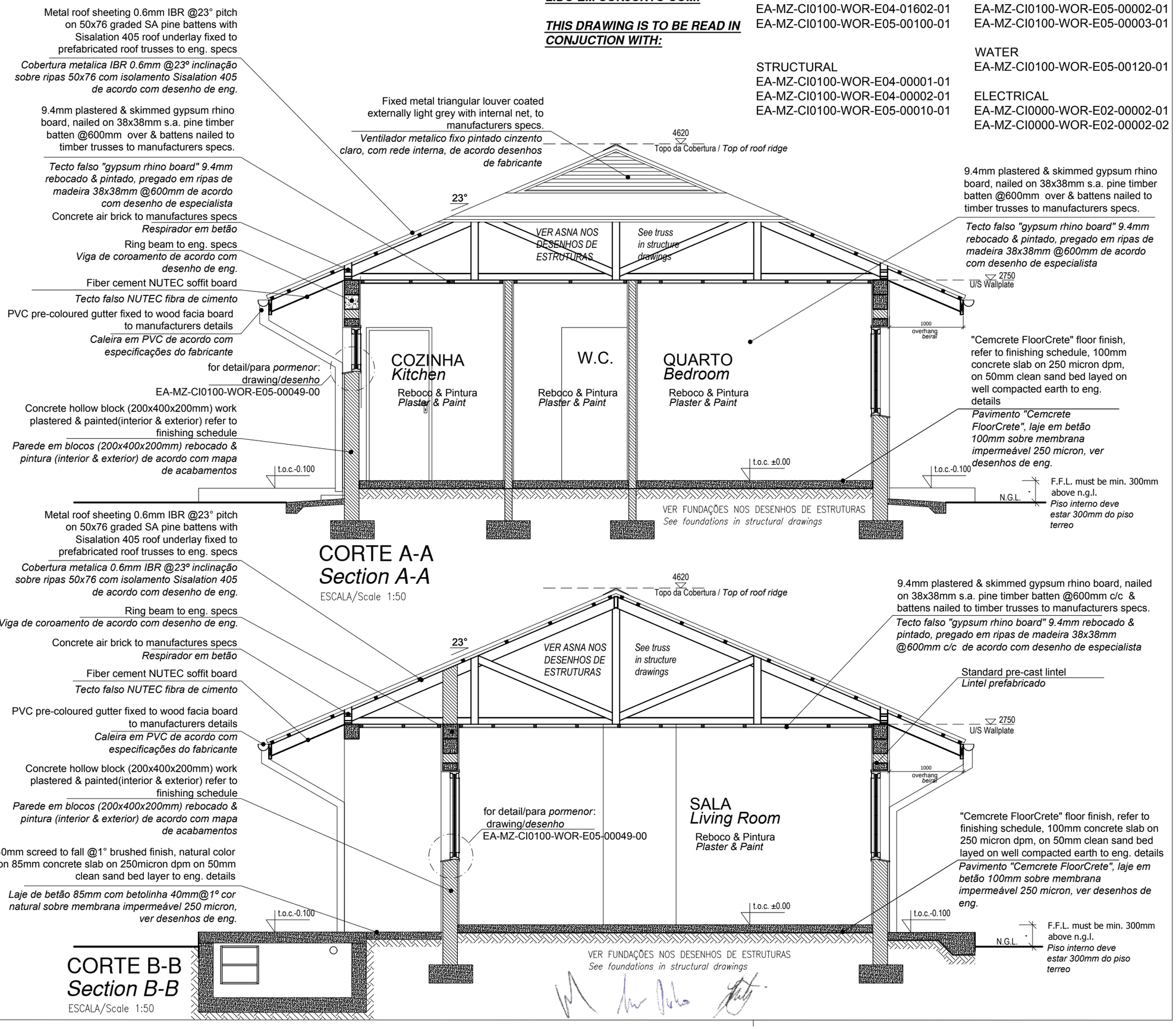

CORTE A-A
Section A-A

ESCALA/Scale 1:50

CORTE B-B
Section B-B

ESCALA/Scale 1:50

ISSUED FOR CONSTRUCTION

WorleyParsons RSA retains the copyright in all intellectual property, including designs and/or documents prepared in terms of this appointment for the project covered by the appointment. The client may use the designs and/or documents for the sole purpose of their intended use on this project only subject to payment for the design having been received. Use for any other purpose, whether or not the design and/or documents have been paid for constitutes an infringement of copyright, and all rights are reserved.

All dimensions must be verified on site before the works commence. Refer any discrepancies to the Engineer.

Copyright reserved

REVISIONS

NO.	DATE	CHK	DONE BY	DESCRIPTION
A	21/07/15	MM	AP	ISSUED INTERNAL REVIEW
B	21/07/15	MM	AP	ISSUED FOR DETAIL DESIGN
C	21/07/15	MM	AP	ISSUED FOR SQUAD CHECK
D	01/10/15	MM	AP	ISSUED FOR CLIENT REVIEW
E	16/11/15	MM	AP	ISSUED CLIENT APPROVAL
0	25/11/15	MM	AP	ISSUED FOR CONSTRUCTION

WorleyParsons
resources & energy
39 MELROSE BOULEVARD, MELROSE ARCH, JOHANNESBURG
P.O. Box 61232, MARSHALLTOWN, 2107
TEL: +27 (0)11 218 3000
FAX: +27(0)11 218 3100
www.worleyparsons.com
WorleyParsons RSA (Pty) Ltd.

MESCH arquitectos

CLIENT

MOZAMBIQUE GAS DEVELOPMENT PROJECT

Anadarko Moçambique Área 1, Lda

PROJECT
AMA 1
RESETTLEMENT
VILLAGE

DRAWING DESCRIPTION
CASA DE REASSENTAMENTO - CORTES A-A & B-B

RESETTLEMENT HOUSE - SECTIONS A-A & B-B

SCALE	DATE
A3@ 1:50	NOV 2015

DRAWING NUMBER:	REV Nº
C00290-00-AR-DSE-0016-001	0

ANADARKO DRAWING NUMBER:
EA-MZ-CI0100-WOR-E05-01606-01

ESTE DESENHO É PARA SER LIDO EM CONJUNTO COM:

THIS DRAWING IS TO BE READ IN CONJUCTION WITH:

ARCHITECTURAL
EA-MZ-CI0100-WOR-E04-01604-01
EA-MZ-CI0100-WOR-E05-01601-01
EA-MZ-CI0100-WOR-E04-01605-01
EA-MZ-CI0100-WOR-E05-01602-01
EA-MZ-CI0100-WOR-E05-01605-01
EA-MZ-CI0100-WOR-E05-01606-01
EA-MZ-CI0100-WOR-E05-01609-01
EA-MZ-CI0100-WOR-E05-01610-01
EA-MZ-CI0100-WOR-E05-00150-01
EA-MZ-CI0100-WOR-E05-01614-01

STRUCTURAL
EA-MZ-CI0100-WOR-E04-00001-01
EA-MZ-CI0100-WOR-E04-00002-01
EA-MZ-CI0100-WOR-E05-00010-01
EA-MZ-CI0100-WOR-E05-00001-01
EA-MZ-CI0100-WOR-E05-00002-01
EA-MZ-CI0100-WOR-E05-00003-01

WATER
EA-MZ-CI0100-WOR-E05-00120-01

ELECTRICAL
EA-MZ-CI0000-WOR-E02-00002-01
EA-MZ-CI0000-WOR-E02-00002-02

Fixed metal triangular louver coated externally light grey with internal net, to manufacturers specs.

Ventilador metalico fixo pintado cinzento claro, com rede interna, de acordo desenhos de fabricante

Metal roof sheeting 0.6mm IBR @23° pitch on 50x76 graded SA pine battens with Sisalation 405 roof underlay fixed to prefabricated roof trusses to eng. specs

Cobertura metalica 0.6mm IBR @23º inclinação sobre ripas 50x76 com isolamento Sisalation 405 de acordo com desenho de eng.

PVC pre-coloured gutter fixed to wood facia board to manufacturers details

Caleira em PVC de acordo com especificações do fabricante

Concrete block (200x400x200mm) work plastered & painted(interior & exterior) refer to finishing schedule

Parede em blocos (200x400x200mm) rebocado & pintura (interior & exterior) de acordo com mapa de acabamentos

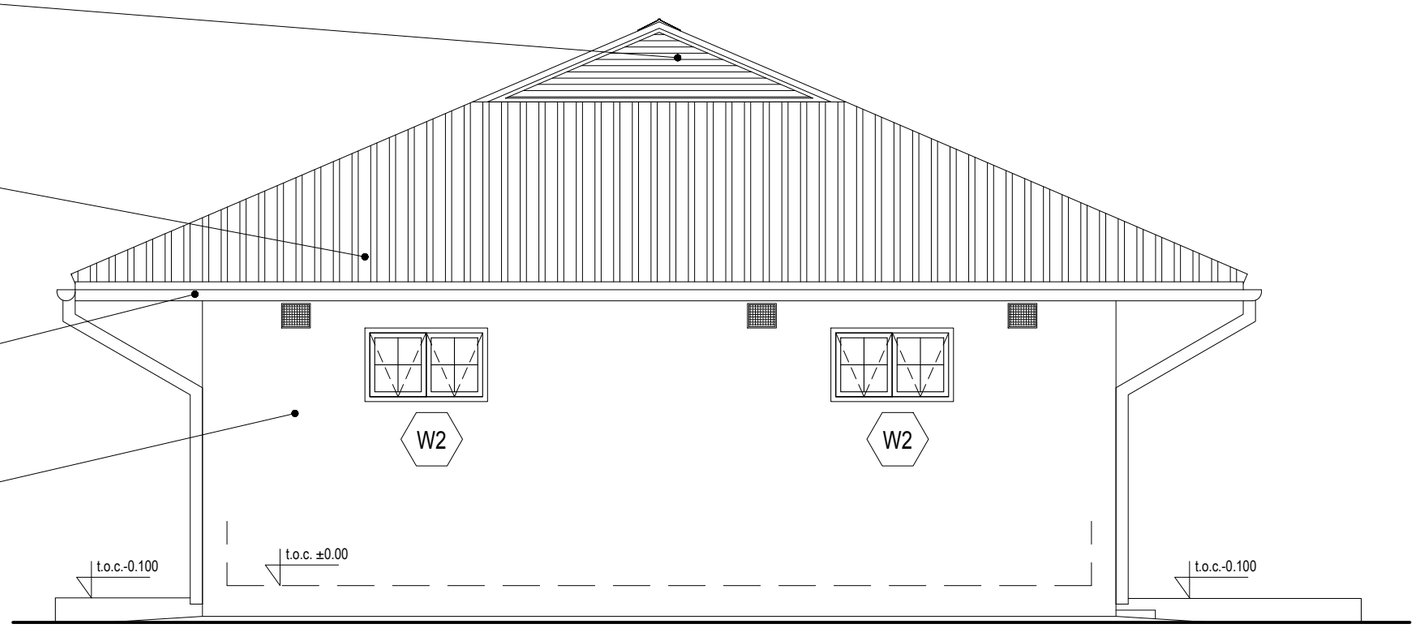

ALÇADO LAT. DIR.
Right Side Elevation
ESCALA/Scale 1:50

Fixed metal triangular louver coated externally light grey with internal net, to manufacturers specs.

Ventilador metalico fixo pintado cinzento claro, com rede interna, de acordo desenhos de fabricante

Metal roof sheeting 0.6mm IBR @23° pitch on 50x76 graded SA pine battens with Sisalation 405 roof underlay fixed to prefabricated roof trusses to eng. specs

Cobertura metalica 0.6mm IBR @23º inclinação sobre ripas 50x76 com isolamento Sisalation 405 de acordo com desenho de eng.

PVC pre-coloured gutter fixed to wood facia board to manufacturers details

Caleira em PVC de acordo com especificações do fabricante

Concrete block (200x400x200mm) work plastered & painted(interior & exterior) refer to finishing schedule

Parede em blocos (200x400x200mm) rebocado & pintura (interior & exterior) de acordo com mapa de acabamentos

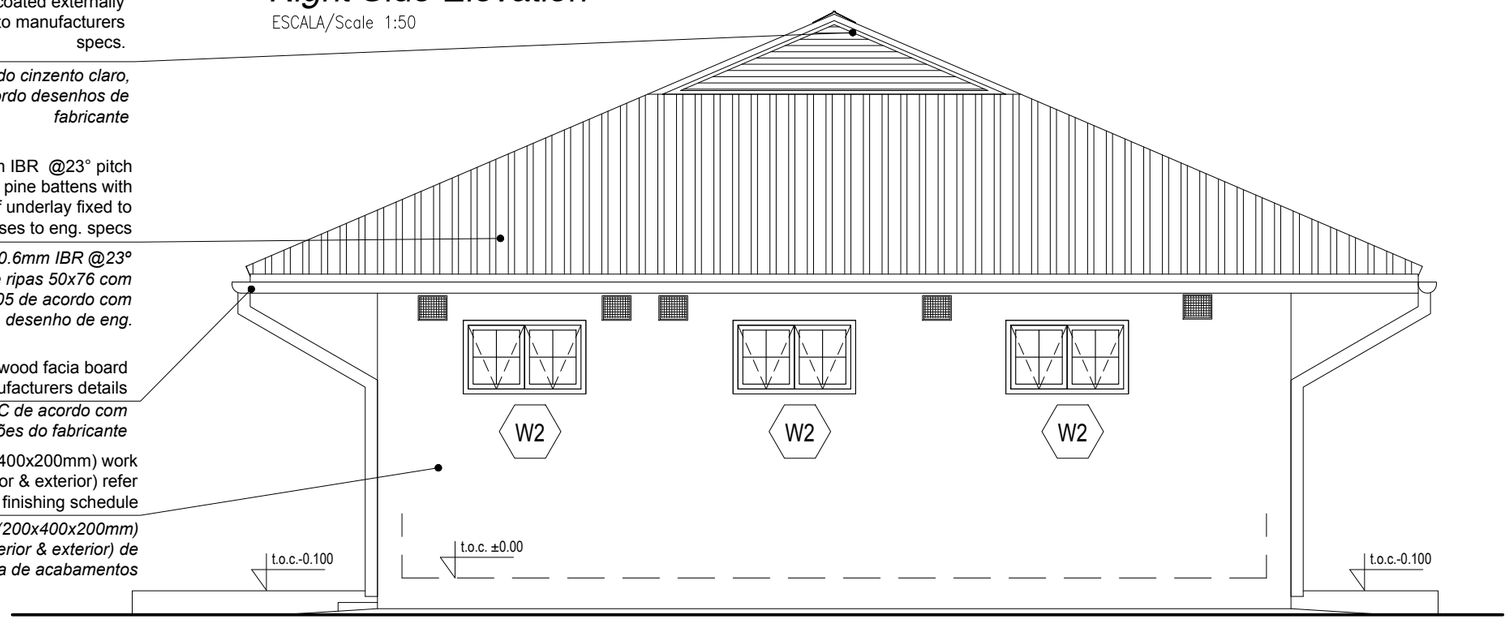

ALÇADO LAT. ESQ.
Left Side Elevation
ESCALA/Scale 1:50

ISSUED FOR CONSTRUCTION

WorleyParsons RSA retains the copyright in all intellectual property, including designs and/or documents prepared in terms of this appointment for the project covered by the appointment. The client may use the designs and/or documents for the sole purpose of their intended use on this project only subject to payment for the design having been received. Use for any other purpose, whether or not the design and/or documents have been paid for constitutes an infringement of copyright, and all rights are reserved.

All dimensions must be verified on site before the works commence. Refer any discrepancies to the Engineer.

Copyright reserved

REVISIONS

NO.	DATE	CHK	DONE BY	DESCRIPTION
A	21/07/15	MM	AP	ISSUED INTERNAL REVIEW
B	21/07/15	MM	AP	ISSUED FOR DETAIL DESIGN
C	21/07/15	MM	AP	ISSUED FOR SQUAD CHECK
D	01/10/15	MM	AP	ISSUED FOR CLIENT REVIEW
E	16/11/15	MM	AP	ISSUED CLIENT APPROVAL
0	25/11/15	MM	AP	ISSUED FOR CONSTRUCTION

WorleyParsons
resources & energy
39 MELROSE BOULEVARD, MELROSE ARCH, JOHANNESBURG
P.O. Box 61232, MARSHALLTOWN, 2107
TEL: +27 (0)11 218 3000
FAX: +27(0)11 218 3100
www.worleyparsons.com
WorleyParsons RSA (Pty) Ltd.

MESCH arquitectos

CLIENT

MOZAMBIQUE GAS DEVELOPMENT PROJECT

Anadarko Moçambique Área 1, Lda

PROJECT
AMA 1
RESETTLEMENT
VILLAGE

DRAWING DESCRIPTION
CASA DE REASSENTAMENTO - ALÇADOS LATERAIS

RESETTLEMENT HOUSE SIDE ELEVATIONS

SCALE	DATE
A3@ 1:50	NOV 2015

DRAWING NUMBER:	REV Nº
C00290-00-AR-DEL-0018-001	0

ANADARKO DRAWING NUMBER:
EA-MZ-CI0100-WOR-E05-01605-01

ESTE DESENHO É PARA SER LIDO EM CONJUNTO COM:

THIS DRAWING IS TO BE READ IN CONJUCTION WITH:

ARCHITECTURAL
EA-MZ-CI0100-WOR-E04-01604-01
EA-MZ-CI0100-WOR-E05-01601-01
EA-MZ-CI0100-WOR-E04-01605-01
EA-MZ-CI0100-WOR-E05-01602-01
EA-MZ-CI0100-WOR-E05-01605-01
EA-MZ-CI0100-WOR-E05-01606-01
EA-MZ-CI0100-WOR-E05-01609-01
EA-MZ-CI0100-WOR-E05-01610-01
EA-MZ-CI0100-WOR-E05-00150-01
EA-MZ-CI0100-WOR-E05-01614-01

STRUCTURAL
EA-MZ-CI0100-WOR-E04-00001-01
EA-MZ-CI0100-WOR-E04-00002-01
EA-MZ-CI0100-WOR-E05-00010-01
EA-MZ-CI0100-WOR-E05-00001-01
EA-MZ-CI0100-WOR-E05-00002-01
EA-MZ-CI0100-WOR-E05-00003-01

WATER
EA-MZ-CI0100-WOR-E05-00120-01

ELECTRICAL
EA-MZ-CI0000-WOR-E02-00002-01
EA-MZ-CI0000-WOR-E02-00002-02

Metal roof sheeting 0.6mm IBR @23° pitch on 50x76 graded SA pine battens with Sisalation 405 roof underlay fixed to prefabricated roof trusses to eng. specs

Cobertura metalica 0.6mm IBR @23º inclinação sobre ripas 50x76 com isolamento Sisolation 405 de acordo com desenho de eng.

PVC pre-coloured gutter fixed to wood facia board to manufacturers details

Caleira em PVC de acordo com especificações do fabricante

Concrete block work plastered & painted(interior & exterior) refer to finishing schedule

Parede em blocos rebocado & pintura (interior & exterior) de acordo com mapa de acabamentos



ALÇADO FRONTAL
Front Elevation
ESCALA/Scale 1:50

Metal roof sheeting 0.6mm @23° pitch on 50x76 graded SA pine battens with Sisalation 405 roof underlay fixed to prefabricated roof trusses to eng. specs

Cobertura metalica 0.6mm IBR @23º inclinação sobre ripas 50x76 com isolamento Sisolation 405 de acordo com desenho de eng.

PVC pre-coloured gutter fixed to wood facia board to manufacturers details

Caleira em PVC de acordo com especificações do fabricante

Concrete block (200x400x200mm) work plastered & painted(interior & exterior) refer to finishing schedule

Parede em blocos (200x400x200mm) rebocado & pintura (interior & exterior) de acordo com mapa de acabamentos

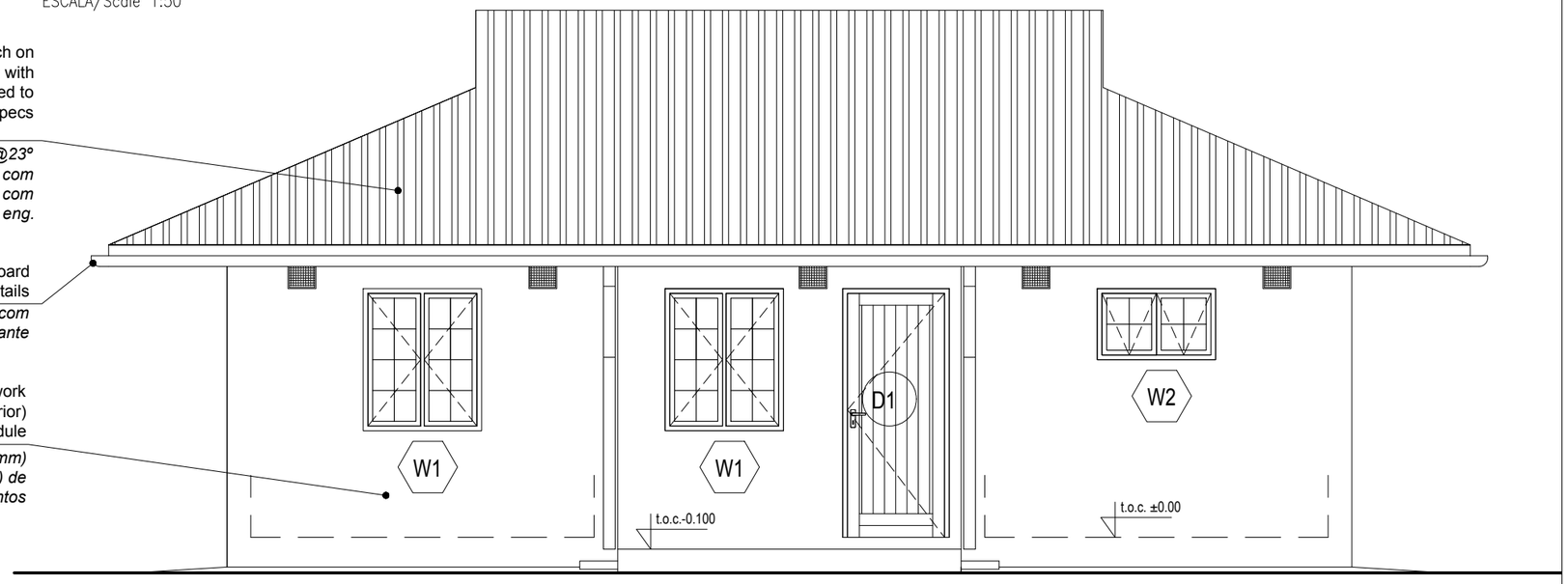

ALÇADO POSTERIOR
Back Elevation
ESCALA/Scale 1:50

ISSUED FOR CONSTRUCTION

WorleyParsons RSA retains the copyright in all intellectual property, including designs and/or documents prepared in terms of this appointment for the project covered by the appointment. The client may use the designs and/or documents for the sole purpose of their intended use on this project only subject to payment for the design having been received. Use for any other purpose, whether or not the design and/or documents have been paid for constitutes an infringement of copyright, and all rights are reserved.

All dimensions must be verified on site before the works commence. Refer any discrepancies to the Engineer.

Copyright reserved

REVISIONS

NO.	DATE	CHK	DONE BY	DESCRIPTION
A	21/07/15	MM	AP	ISSUED INTERNAL REVIEW
B	21/07/15	MM	AP	ISSUED FOR DETAIL DESIGN
C	21/07/15	MM	AP	ISSUED FOR SQUAD CHECK
D	01/10/15	MM	AP	ISSUED FOR CLIENT REVIEW
E	16/11/15	MM	AP	ISSUED CLIENT APPROVAL
0	25/11/15	MM	AP	ISSUED FOR CONSTRUCTION

WorleyParsons
resources & energy
39 MELROSE BOULEVARD, MELROSE ARCH, JOHANNESBURG
P.O. Box 61232, MARSHALLTOWN, 2107
TEL: +27 (0)11 218 3000
FAX: +27(0)11 218 3100
www.worleyparsons.com
WorleyParsons RSA (Pty) Ltd.

MESCH arquitectos

CLIENT

MOZAMBIQUE GAS DEVELOPMENT PROJECT

Anadarko Moçambique Área 1, Lda

PROJECT
AMA 1
RESETTLEMENT
VILLAGE

DRAWING DESCRIPTION
CASA DE REASSENTAMENTO - ALÇADOS FRONTAL E POSTERIOR
RESETTLEMENT HOUSE - FRONT & BACK ELEVATIONS

SCALE	DATE
A3@ 1:50	NOV 2015

DRAWING NUMBER:	REV Nº
C00290-00-AR-DLP-0016-001	0

ANADARKO DRAWING NUMBER:
EA-MZ-CI0100-WOR-E05-01603-01

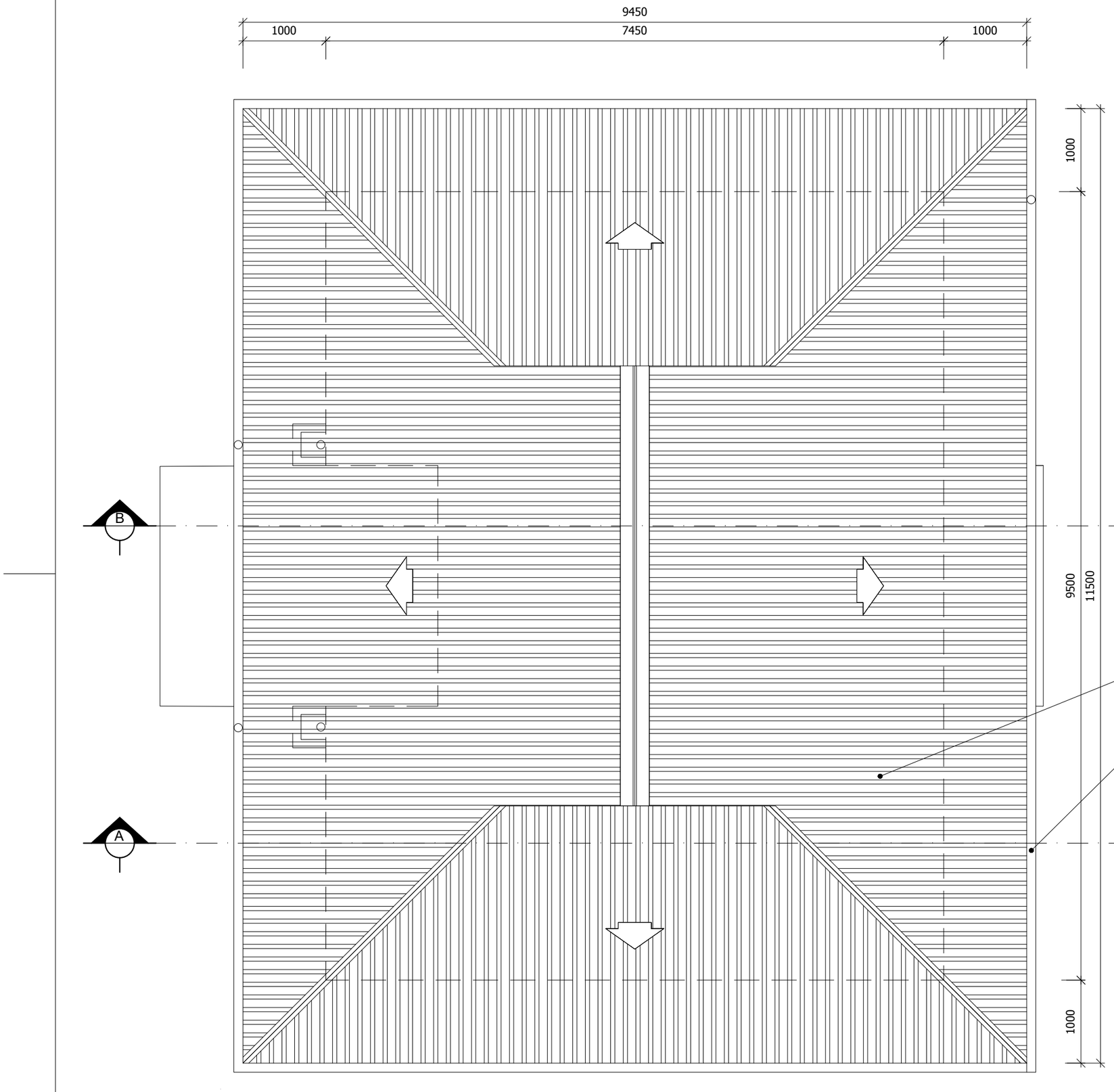

ESTE DESENHO É PARA SER LIDO EM CONJUNTO COM:

THIS DRAWING IS TO BE READ IN CONJUCTION WITH:

ARCHITECTURAL
EA-MZ-CI0100-WOR-E04-01604-01
EA-MZ-CI0100-WOR-E04-01605-01
EA-MZ-CI0100-WOR-E05-01603-01
EA-MZ-CI0100-WOR-E05-01605-01
EA-MZ-CI0100-WOR-E05-01606-01

STRUCTURAL
EA-MZ-CI0100-WOR-E04-00001-01
EA-MZ-CI0100-WOR-E04-00002-01
EA-MZ-CI0100-WOR-E05-00010-01
EA-MZ-CI0100-WOR-E05-00001-01
EA-MZ-CI0100-WOR-E05-00002-01
EA-MZ-CI0100-WOR-E05-00003-01

WATER
EA-MZ-CI0100-WOR-E05-00120-01

ELECTRICAL
EA-MZ-CI0000-WOR-E02-00002-01
EA-MZ-CI0000-WOR-E02-00002-02

ISSUED FOR CONSTRUCTION

WorleyParsons RSA retains the copyright in all intellectual property, including designs and/or documents prepared in terms of this appointment for the project covered by the appointment. The client may use the designs and/or documents for the sole purpose of their intended use on this project only subject to payment for the design having been received. Use for any other purpose, whether or not the design and/or documents have been paid for constitutes an infringement of copyright, and all rights are reserved.

All dimensions must be verified on site before the works commence. Refer any discrepancies to the Engineer.

Copyright reserved

REVISIONS

NO.	DATE	CHK	DONE BY	DESCRIPTION
A	21/07/15	MM	AP	ISSUED INTERNAL REVIEW
B	21/07/15	MM	AP	ISSUED FOR DETAIL DESIGN
C	21/07/15	MM	AP	ISSUED FOR SQUAD CHECK
D	01/10/15	MM	AP	ISSUED FOR CLIENT REVIEW
E	16/11/15	MM	AP	ISSUED CLIENT APPROVAL
0	25/11/15	MM	AP	ISSUED FOR CONSTRUCTION

WorleyParsons
resources & energy
39 MELROSE BOULEVARD, MELROSE ARCH, JOHANNESBURG
P.O. Box 61232, MARSHALLTOWN, 2107
TEL: +27 (0)11 218 3000
FAX: +27(0)11 218 3100
www.worleyparsons.com
WorleyParsons RSA (Pty) Ltd.

MESCH arquitectos

CLIENT

MOZAMBIQUE GAS DEVELOPMENT PROJECT

Anadarko Moçambique Área 1, Lda

PROJECT
AMA 1
RESETTLEMENT
VILLAGE

DRAWING DESCRIPTION
CASA DE REASSENTAMENTO - PLANTA DE COBERTURA

RESETTLEMENT HOUSE - ROOF PLAN

SCALE	DATE
A3@ 1:50	NOV 2015

DRAWING NUMBER:	REV Nº
C00290-00-AR-DLP-0136-001	0

ANADARKO DRAWING NUMBER:
EA-MZ-CI0100-WOR-E05-01602-01

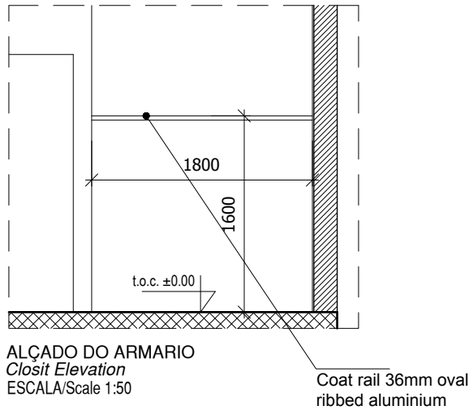

ALÇADO DO ARMARIO
Closit Elevation
ESCALA/Scale 1:50

Coat rail 36mm oval ribbed aluminium extursion, white moulded PVC

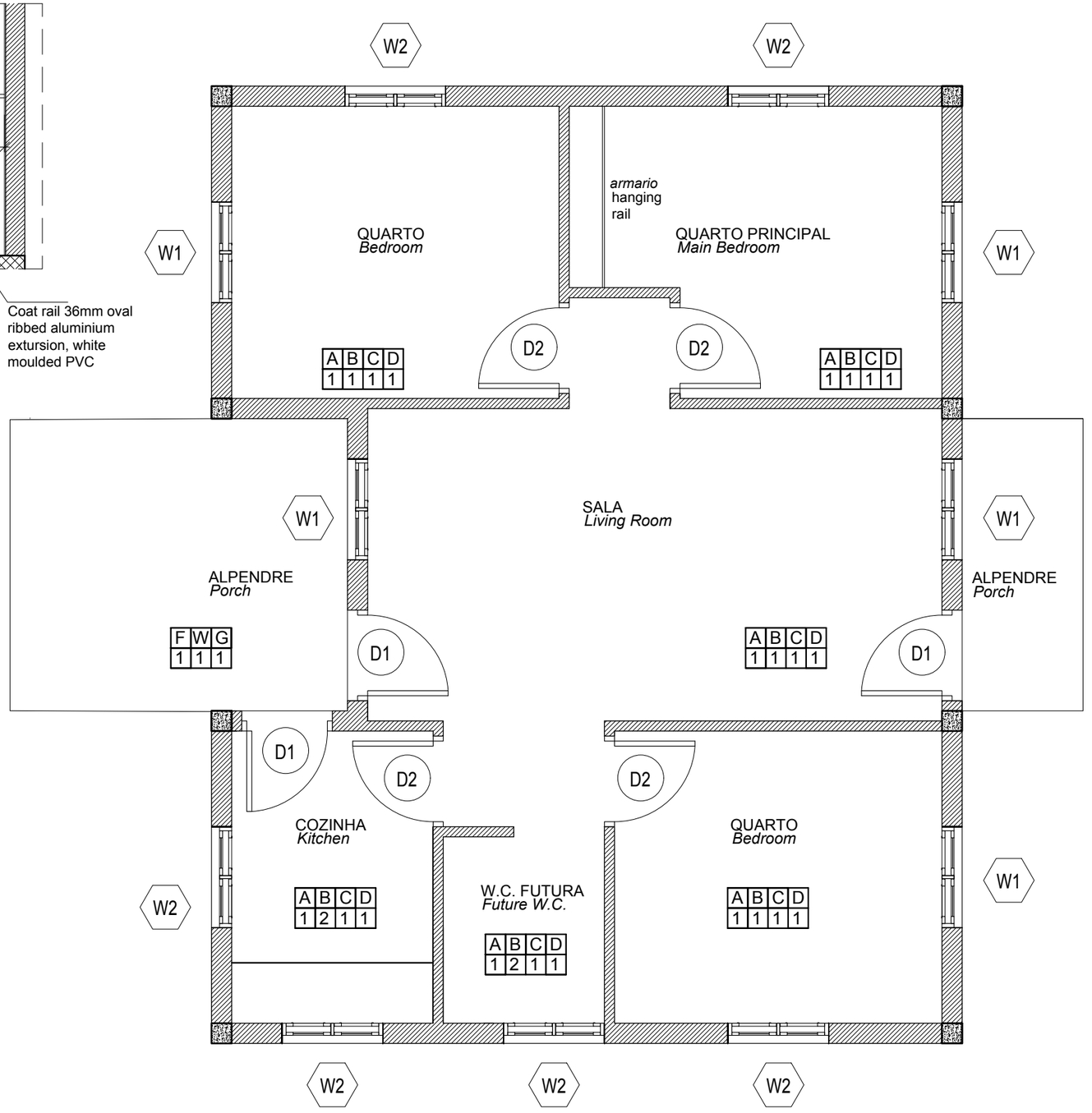

ESTE DESENHO É PARA SER LIDO EM CONJUNTO COM:

THIS DRAWING IS TO BE READ IN CONJUCTION WITH:

ARCHITECTURAL
EA-MZ-CI0100-WOR-E05-01609-01
EA-MZ-CI0100-WOR-E05-01610-01
EA-MZ-CI0100-WOR-E05-00150-01
EA-MZ-CI0100-WOR-E05-01614-01

STRUCTURAL
EA-MZ-CI0100-WOR-E04-00001-01
EA-MZ-CI0100-WOR-E04-00002-01
EA-MZ-CI0100-WOR-E05-00010-01
EA-MZ-CI0100-WOR-E05-00001-01
EA-MZ-CI0100-WOR-E05-00002-01
EA-MZ-CI0100-WOR-E05-00003-01

WATER
EA-MZ-CI0100-WOR-E05-00120-01

ELECTRICAL
EA-MZ-CI0000-WOR-E02-00002-01
EA-MZ-CI0000-WOR-E02-00002-02

ISSUED FOR CONSTRUCTION

WorleyParsons RSA retains the copyright in all intellectual property, including designs and/or documents prepared in terms of this appointment for the project covered by the appointment. The client may use the designs and/or documents for the sole purpose of their intended use on this project only subject to payment for the design having been received. Use for any other purpose, whether or not the design and/or documents have been paid for constitutes an infringement of copyright, and all rights are reserved.

All dimensions must be verified on site before the works commence. Refer any discrepancies to the Engineer.

Copyright reserved

REVISIONS

NO.	DATE	CHK	DONE BY	DESCRIPTION
A	21/07/15	MM	AP	ISSUED INTERNAL REVIEW
B	21/07/15	MM	AP	ISSUED FOR DETAIL DESIGN
C	21/07/15	MM	AP	ISSUED FOR SQUAD CHECK
D	01/10/15	MM	AP	ISSUED FOR CLIENT REVIEW
E	16/11/15	MM	AP	ISSUED CLIENT APPROVAL
0	25/11/15	MM	AP	ISSUED FOR CONSTRUCTION

WorleyParsons
resources & energy
39 MELROSE BOULEVARD, MELROSE ARCH, JOHANNESBURG
P.O. Box 61232, MARSHALLTOWN, 2107
TEL: +27 (0)11 218 3000
FAX: +27(0)11 218 3100
www.worleyparsons.com
WorleyParsons RSA (Pty) Ltd.

MESCH arquitectos

CLIENT

MOZAMBIQUE GAS DEVELOPMENT PROJECT

Anadarko Moçambique Área 1, Lda

PROJECT
AMA 1
RESETTLEMENT
VILLAGE

DRAWING DESCRIPTION
CASA DE REASSENTAMENTO - PLANTA DE ACABA. & VÃOS
RESETTLEMENT HOUSE - FINISHING,
DOORS & WINDOWS KEY PLAN

SCALE	DATE
A3@ 1:50	NOV 2015

DRAWING NUMBER:	REV Nº
C00290-00-AR-DLP-0135-001	0

ANADARKO DRAWING NUMBER:
EA-MZ-CI0100-WOR-E05-01601-01

ESTE DESENHO É PARA SER LIDO EM CONJUNTO COM:

THIS DRAWING IS TO BE READ IN CONJUCTION WITH:

ARCHITECTURAL
EA-MZ-CI0100-WOR-E04-01604-01
EA-MZ-CI0100-WOR-E05-01601-01
EA-MZ-CI0100-WOR-E05-01602-01
EA-MZ-CI0100-WOR-E05-00100-01
EA-MZ-CI0100-WOR-E05-01603-01
EA-MZ-CI0100-WOR-E05-01605-01
EA-MZ-CI0100-WOR-E05-01606-01
EA-MZ-CI0100-WOR-E05-01607-01
EA-MZ-CI0100-WOR-E05-01608-01
EA-MZ-CI0100-WOR-E05-01613-01
EA-MZ-CI0100-WOR-E05-00105-01
EA-MZ-CI0100-WOR-E05-00105-02

STRUCTURAL
EA-MZ-CI0100-WOR-E04-00001-01
EA-MZ-CI0100-WOR-E04-00002-01
EA-MZ-CI0100-WOR-E05-00010-01
EA-MZ-CI0100-WOR-E05-00001-01
EA-MZ-CI0100-WOR-E05-00002-01
EA-MZ-CI0100-WOR-E05-00003-01

INTERNAL SCHEDULE

		1	2
FLOOR	A	"CEMCRETE FloorCrete" CEMENTE-BASE FLOOR FINISH ROLLED OR WOOD-FLOATED WITH COLOR PIGMENT "SLATE" TO MANUFACTURES SPECS, 100mm CONCRETE SLAB ON 250 MICRON DAMP-PROOF MEMBRANE, ON 50mm CLEAN SAND BED LAYER ON WELL COMPACTED EARTH TO CIVIL ENGINEER SPECS & DRAWINGS	
WALLS	B	FOR PAINT DETAILS REFER TO MANUFACTURER´S DOCUMENT ATTACHED EA-MZ-CI0000-WOR-E04-00031-01	FOR PAINT DETAILS REFER TO MANUFACTURER´S DOCUMENT ATTACHED EA-MZ-CI0000-WOR-E04-00031-01
CEILING	C	9.4mm PLASTERED & SKIMMED GYPSUM RHINO BOARD FOR PAINT DETAILS REFER TO MANUFACTURER´S DOCUMENT ATTACHED EA-MZ-CI0000-WOR-E04-00031-01	
SILLS	D	NUTEC SILLS, TO MANUFACTURER´S DETAILS, SAME COLOUR AS INTERNAL WALLS REFER TO DRAWING EA-MZ-CI0100-WOR-E05-00049-00	

EXTERNAL SCHEDULE

		1	REMARKS
FLOOR	F	CONCRETE FLOOR TO HAVE POWER FLOAT FINISH, NATURAL COLOR ON 85mm CONCRETE SLAB ON 250 MICRON DAMP-PROOF MEMBRANE, ON 50mm CLEAN SAND BED LAYER ON WELL COMPACTED EARTH TO CIVIL ENGINEER SPECS & DRAWINGS	COLOUR TO BE NATURAL CONCRETE
WALLS	W	FOR PAINT DETAILS REFER TO MANUFACTURER´S DOCUMENT ATTACHED EA-MZ-CI0000-WOR-E04-00031-01	FOR PAINT DETAILS REFER TO MANUFACTURER´S DOCUMENT ATTACHED EA-MZ-CI0000-WOR-E04-00031-01 NOTE: LINE TO BE MADE IN THE PLASTER FOR EASIER COLOUR CHANGE
CEILINGS	G	NUTEC FIBRE CEMENT BOARD, NAILED ON 38x38mm s.a. PINE TIMBER BATTEN @600mm TO ENG. SPECS.	
ROOFSHEET SPECS	R	METAL ROOF SHEETING 0.6mm IBR @23° PITCH 50X76 GRADED SA PINE BATTENS WITH SISALATION 405 ROOF UNDERLAY FIXED TO PREFABRICATED ROOF TRUSSES TO ENG. SPECS.	METAL ROOF SHEETING TO BE "KALAHARI RED" COLOUR OR SIMILAR
FASCIA		10mm X 225 NUTEC FASCIA BOARD PAINTED	PVC PRE-COLOURED GUTTER TO BE LIGHT GREY NUTEC FASCIA BOARD TO BE LIGHT GREY
LOUVER		FIXED METAL TRIANGULAR LOUVER COATED EXTERNALLY WITH INTERNAL NET TO MANUFACTOR´S SPECS	PRE-COLOURED TO BE LIGHT GREY

SPECIFICATIONS:

EXTERNAL WALLING

EXTERNAL WALL TO BE 200x400x200mm HOLLOW CONCRETE BLOCKS NOMINAL COMPRESSIVE STRENGTH MINIMUM OF 5.0 MPa (check manufacturers details) UNLESS OTHERWISE STATED.

ALL BLOCK IN STRETCHER BOND LAID IN CEMENT MORTAR TO STRUCTURAL ENGINEER´S SPECIFICATION.

ALL MORTAR JOINTS TO BE 10mm.

ALL BRICKFORCE SHALL BE IN STAINLESS STEEL FOR EXTERNAL WALLS AND GALVANISED FOR INTERNAL WALLS TO ENGINEER´S SPECIFICATIONS.

ALL EXTERNAL WIRES SHOULD HAVE AT LEAST 20mm COVERAGE FROM FACE OF BLOCKWORK.

ALL WALLS WITH NO RING BEAM TO HAVE BRICKFORCE EVERY COURSE TO DOOR\WINDOW HEAD HEIGHT. THEREAFTER EVERY COURSE TO WALLPLATE HEIGHT

INTERNAL SILLS: PLASTERED AS PER WALL
EXTERNAL SILLS: REFER TO ARCH. DRAWING EA-MZ-CI0100-WOR-E05-00049-00

WALL FINISH TO BE PLASTER & PAINT APPLIED STRICTLY TO MANUFACTURERS SPECIFICATION.

INTERNAL DIVISIONS

INTERNAL WALL TO BE 100x400x200mm HOLLOW CONCRETE BLOCK NOMINAL COMPRESSIVE STRENGTH MINIMUM OF 5.0 MPa (check manufacturers details) GENERALLY UNLESS OTHERWISE SPECIFIED ON FLOOR PLAN.

ALL BLOCK IN STRETCHER BOND LAID IN CEMENT MORTAR TO STRUCTURAL ENGINEER´S SPECIFICATION.

ALL MORTAR JOINTS TO BE 10mm.

BRICKFORCE AS PER PREVIOUS.

ALL DOORS TO HAVE RUBBER DOORSTOPS

WALL FINISH TO BE PLASTER & PAINT APPLIED STRICTLY TO MANUFACTURERS SPECIFICATION.
EA-MZ-CI0000-WOR-E04-00031-01

PLASTER SPECS

PLASTER:
ALL PLASTERED WALLS, CEILING AND SIMILAR SURFACES BEING PAINTED OR DISTEMPERED SHALL BE FILLED WHERE NECESSARY WITH SUITABLE STOPPING OR PATCHING.

PLASTER AND RUBBED DOWN READY TO RECEIVE THE FINISHING.

ALL PLASTER MIX TO BE IN STRICT ACORDANCE TO MANUFACTURER´S SPECIFICATION.

PLASTER SHALL BE 15mm THICK WOOD FLOAT FINISH FOR EXTERNAL WALLS, COLUMNS & BEAMS.
INTERNAL WALLS SHALL BE 12mm THICK STEEL FLOAT FINISH.

ALL EXCESSIVE MORTAR IS TO BE REMOVED FROM BLOCKWORK AND JOINTS RAKED PRIOR TO PLASTERING.

WALLS SHALL BE WELL-WETTED BEFORE PLASTERING COMMENCES.

PAINTING SPECS

PREPARATORY WORK.
ALL FLOORS MUST BE SWEPT AND WALLS DUSTED DOWN, AND ALL SURFACES NOT BEING PAINTED IS TO BE COVERED UP AND PROTECTED.

FOR PAINT DETAILS REFER TO MANUFACTURER´S DOCUMENT ATTACHED -
EA-MZ-CI0000-WOR-E04-00031-01

FLOOR FINISHING

ALL CONCRETE FLOOR SLAB EDGES TO BE BULLNOSE ROUNDED 20mm TO PREVENT CRACKS WHERE NECESSARY (STEPS & EDGE OF PORCHES)

CONCRETE FLOOR TO HAVE POWER FLOAT FINISH.

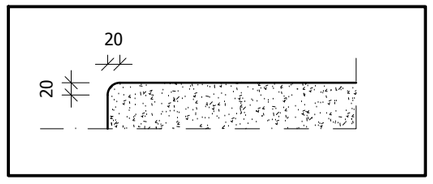

ISSUED FOR CONSTRUCTION

WorleyParsons RSA retains the copyright in all intellectual property, including designs and/or documents prepared in terms of this appointment for the project covered by the appointment. The client may use the designs and/or documents for the sole purpose of their intended use on this project only subject to payment for the design having been received. Use for any other purpose, whether or not the design and/or documents have been paid for constitutes an infringement of copyright, and all rights are reserved.

All dimensions must be verified on site before the works commence. Refer any discrepancies to the Engineer.

Copyright reserved

REVISIONS

NO.	DATE	CHK	DONE BY	DESCRIPTION
A	21/07/15	MM	AP	ISSUED INTERNAL REVIEW
B	21/07/15	MM	AP	ISSUED FOR DETAIL DESIGN
C	21/07/15	MM	AP	ISSUED FOR SQUAD CHECK
D	01/10/15	MM	AP	ISSUED FOR CLIENT REVIEW
E	16/11/15	MM	AP	ISSUED CLIENT APPROVAL
0	25/11/15	MM	AP	ISSUED FOR CONSTRUCTION

WorleyParsons
resources & energy
39 MELROSE BOULEVARD, MELROSE ARCH, JOHANNESBURG
P.O. Box 61232, MARSHALLTOWN, 2107
TEL: +27 (0)11 218 3000
FAX: +27(0)11 218 3100
www.worleyparsons.com
WorleyParsons RSA (Pty) Ltd.

MESCH arquitectos

CLIENT

MOZAMBIQUE GAS DEVELOPMENT PROJECT

Anadarko Moçambique Área 1, Lda

PROJECT
AMA 1
RESETTLEMENT
VILLAGE

DRAWING DESCRIPTION
CASA DE REASSENTAMENTO - MAPA DE ACABAMENTOS

RESETTLEMENT HOUSE - FINISHING SCHEDULE

SCALE	DATE
A3@ 1:50	NOV 2015

DRAWING NUMBER:	REV Nº
C00290-00-AR-SCH-0002	0

ANADARKO DRAWING NUMBER:
EA-MZ-CI0100-WOR-E05-00150-01

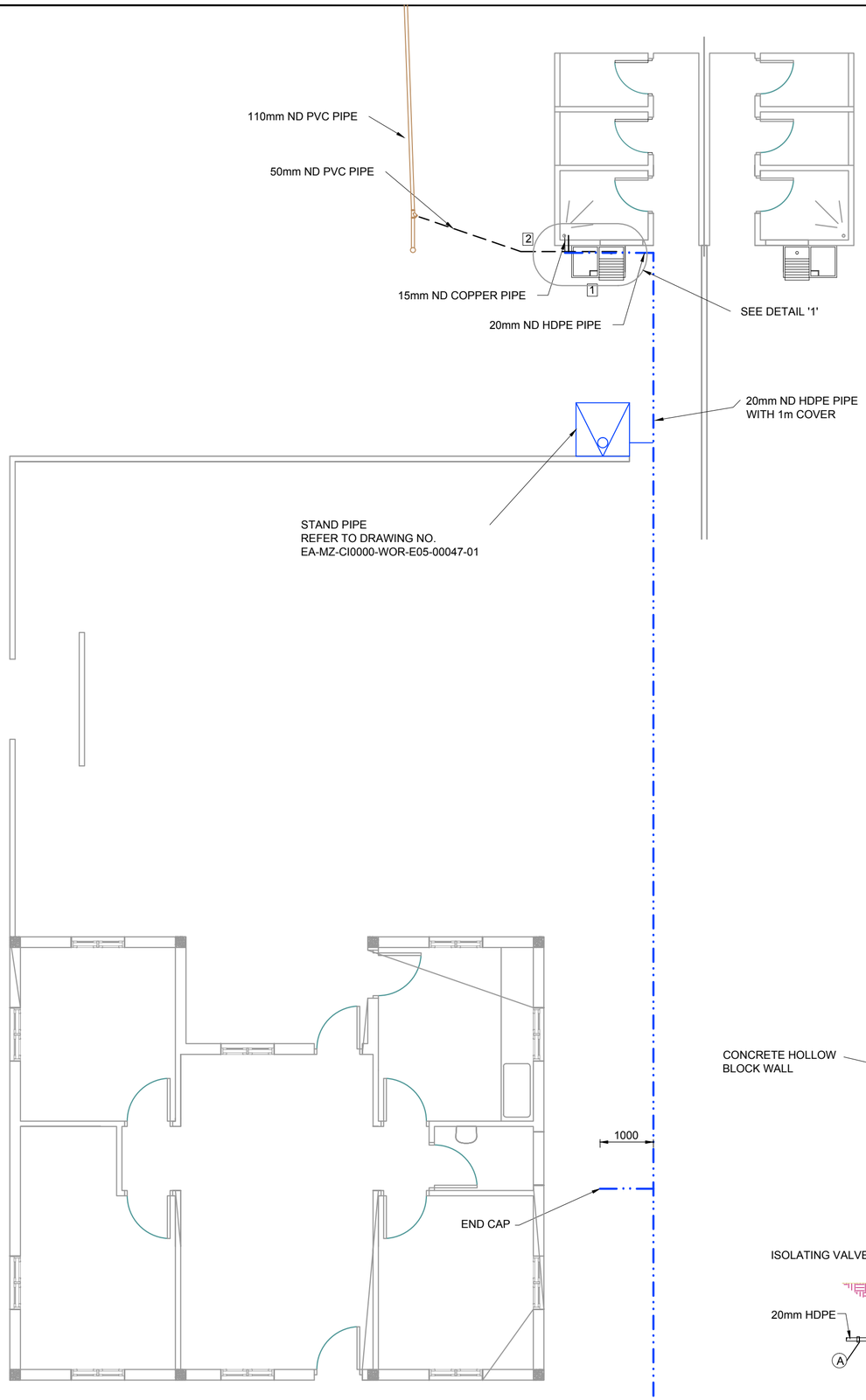

PLAN - RESIDENTIAL UNITS

1:50

RESIDENTIAL UNITS - INTERNAL DRAINAGE CONNECTIONS			
RESIDENTIAL UNITS			
No	DESCRIPTION	UNIT	QUANTITY
1	P-TRAP	No.	1
	50mm ND PVC PIPE	m	2m
	DRAIN GULLEY COMPLETE	No.	1
2	50mm - SINGLE 87.5° PLAIN JUNCTION	No.	1
	50mm ND PVC PIPE	m	2m
	SHOWER TRAP	No.	1

COMMUNITY FACILITIES - COMMUNITY CENTRE WATER SUPPLY			
ADMIN. BUILDING			
No	DESCRIPTION	UNIT	QUANTITY
A	20mm/15mm HDPE / COPPER ADAPTOR	No.	1
B	90° ELBOW - COPPER	No.	6
Ca	TOILETS:		
	STRAIGHT COUPLER. COPPER TO MALE CONN.	No.	1
Cb	KITCHEN SINK/ HAND WASH BASIN / SHOWER:		
	STRAIGHT TAP CONNECTOR.COPPER TO FEMALE CONN.	No.	1
	15mm HDPE / COPPER T-PIECE	No.	1
	15mm COPPER PIPE	m	2m
	20mm ND HDPE PIPE	m	26m

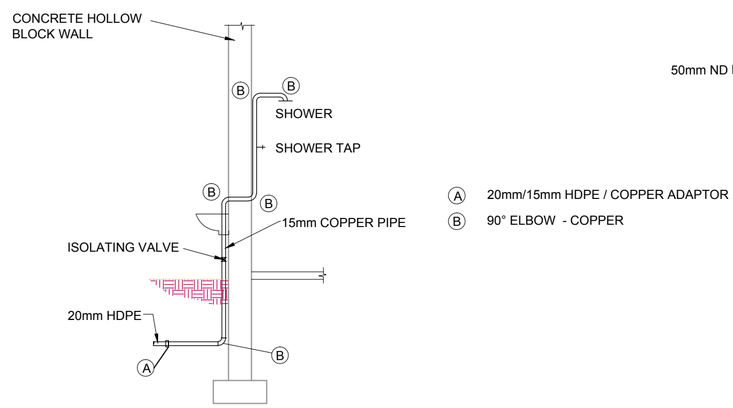

TYPICAL WATER SUPPLY DETAIL AT BUILDINGS

NTS

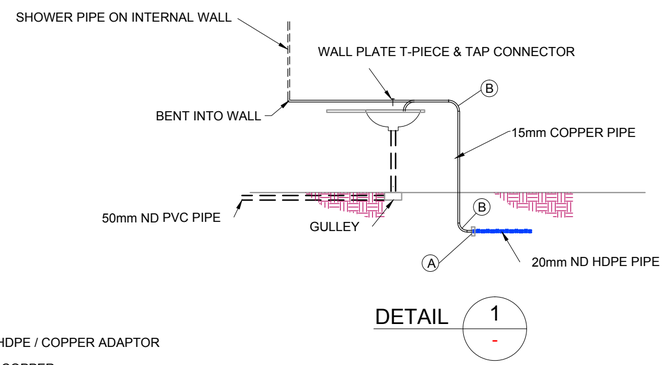

DETAIL 1

-

NOTES

REFERENCE DRAWINGS:

RESIDENTIAL UNITS
C00290-00-WW-DRD-0018-001/002

LEGEND:

- 110mm ND PVC PIPE
- 15mm ND COPPER PIPE
- 50mm ND PVC PIPE
- 20mm ND HDPE PIPE

ISSUED FOR CONSTRUCTION

WorleyParsons RSA retains the copyright in all intellectual property, including designs and/or documents prepared in terms of this appointment for the project covered by the appointment. The client may use the designs and/or documents for the sole purpose of their intended use on this project only subject to payment for the design having been received. Use for any other purpose, whether or not the design and/or documents have been paid for constitutes an infringement of copyright, and all rights are reserved.

All dimensions must be verified on site before the works commence. Refer any discrepancies to the Engineer.

Copyright reserved

REVISIONS

NO.	DATE	CHECKED	DONE BY	DESCRIPTION
A	29/10/15		AR	ISSUED FOR INTERNAL REVIEW
B	30/10/15		AR	ISSUED FOR DETAIL DESIGN
C	01/11/15		AR	ISSUED FOR SQUAD CHECK
D	06/11/15		AR	ISSUED FOR CLIENT APPROVAL
E	25/11/15		CT	ISSUED FOR CLIENT APPROVAL
0	08/12/15		CT	ISSUED FOR CONSTRUCTION

WorleyParsons
resources & energy
39 MELROSE BOULEVARD, MELROSE ARCH, JOHANNESBURG
P.O. Box 61232, MARSHALLTOWN, 2107
TEL: +27 (0)11 218 3000
FAX: +27(0)11 218 3100
www.worleyparsons.com
WorleyParsons RSA (Pty) Ltd.

	NAME	SIGNATURE	DATE
DRAWN BY:	A. RAJAH		29/10/2015
CHECKED:	L. PADAYACHEE		29/10/2015
DESIGNER:	L. PADAYACHEE		29/10/2015
PR ENG:	L. PADAYACHEE		29/10/2015
PROJECT ENG MANAGER:	L. PADAYACHEE		29/10/2015
LOCAL PR ENG:			
CLIENT:			

CLIENT

MOZAMBIQUE GAS DEVELOPMENT PROJECT

Anadarko
Moçambique Área 1, Lda

PROJECT
AMA 1
RESETTLEMENT
VILLAGE

DRAWING DESCRIPTION

RESIDENTIAL UNITS
INTERNAL RETICULATION

SCALE 1:50
ORIGINAL DWG SIZE A1

DATE NOVEMBER 2015

DRAWING NUMBER C00290-00-PL-DRD-0015-001

REV NO 0

ANADARKO DRAWING NUMBER
EZ-MZ-CI0100-WOR-E05-00120-01

ESTE DESENHO É PARA SER LIDO EM CONJUNTO COM:

THIS DRAWING IS TO BE READ IN CONJUCTION WITH:

ARCHITECTURAL
EA-MZ-CI0100-WOR-E04-01604-01
EA-MZ-CI0100-WOR-E05-01601-01
EA-MZ-CI0100-WOR-E04-01605-01
EA-MZ-CI0100-WOR-E05-00100-01
EA-MZ-CI0100-WOR-E05-00105-01
EA-MZ-CI0100-WOR-E05-01606-01
EA-MZ-CI0100-WOR-E05-01609-01
EA-MZ-CI0100-WOR-E05-01610-01
EA-MZ-CI0100-WOR-E05-00150-01
EA-MZ-CI0100-WOR-E05-01614-01

STRUCTURAL
EA-MZ-CI0100-WOR-E04-00001-01
EA-MZ-CI0100-WOR-E04-00002-01
EA-MZ-CI0100-WOR-E05-00010-01
EA-MZ-CI0100-WOR-E05-00001-01
EA-MZ-CI0100-WOR-E05-00002-01
EA-MZ-CI0100-WOR-E05-00003-01

WATER
EA-MZ-CI0100-WOR-E05-00120-01

ELECTRICAL
EA-MZ-CI0000-WOR-E02-00002-01
EA-MZ-CI0000-WOR-E02-00002-02

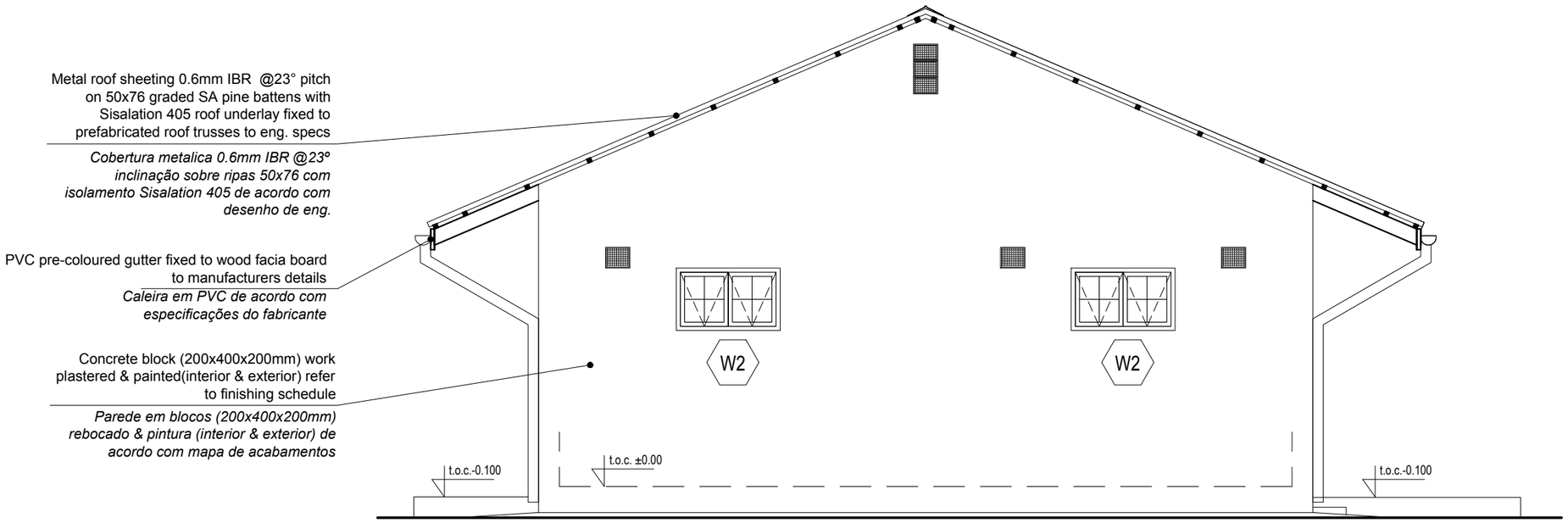

ALÇADO LAT. DIR.
Right Side Elevation
ESCALA/Scale 1:50

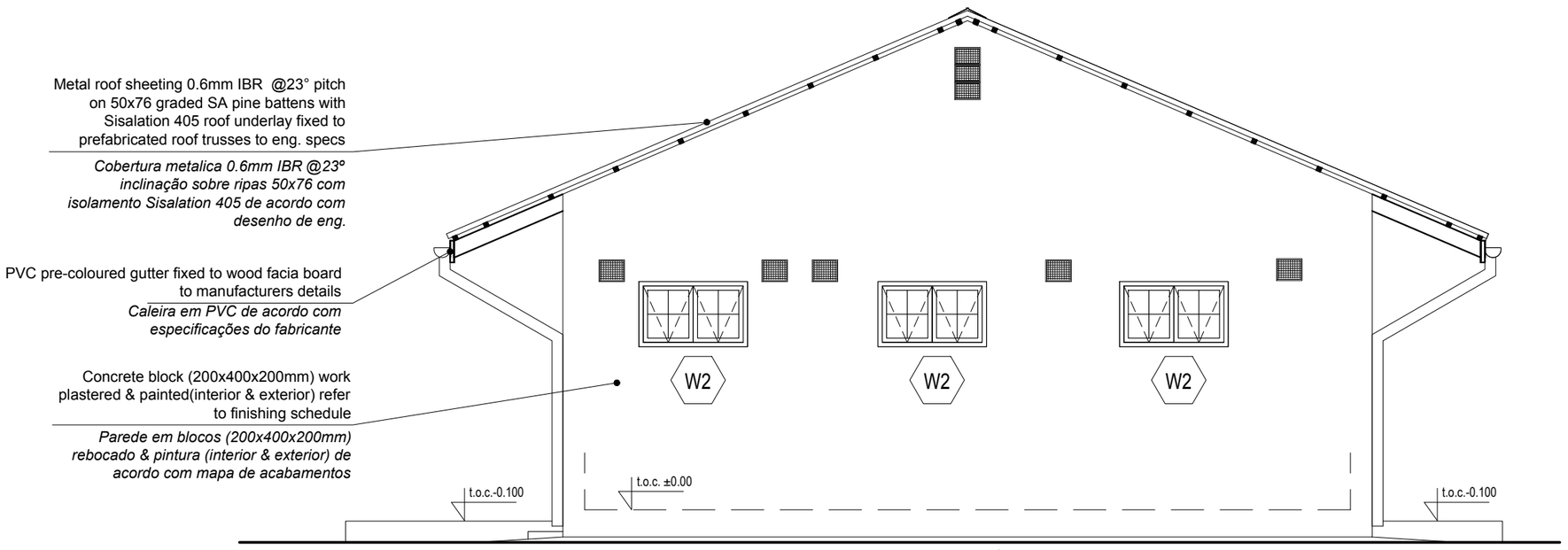

ALÇADO LAT. ESQ.
Left Side Elevation
ESCALA/Scale 1:50

ISSUED FOR CONSTRUCTION

WorleyParsons RSA retains the copyright in all intellectual property, including designs and/or documents prepared in terms of this appointment for the project covered by the appointment. The client may use the designs and/or documents for the sole purpose of their intended use on this project only subject to payment for the design having been received. Use for any other purpose, whether or not the design and/or documents have been paid for constitutes an infringement of copyright, and all rights are reserved.

All dimensions must be verified on site before the works commence. Refer any discrepancies to the Engineer.

Copyright reserved

REVISIONS

NO.	DATE	CHK	DONE BY	DESCRIPTION
A	21/07/15	MM	AP	ISSUED INTERNAL REVIEW
B	21/07/15	MM	AP	ISSUED FOR DETAIL DESIGN
C	21/07/15	MM	AP	ISSUED FOR SQUAD CHECK
D	01/10/15	MM	AP	ISSUED FOR CLIENT REVIEW
E	16/11/15	MM	AP	ISSUED CLIENT APPROVAL
0	25/11/15	MM	AP	ISSUED FOR CONSTRUCTION

WorleyParsons
resources & energy
39 MELROSE BOULEVARD, MELROSE ARCH, JOHANNESBURG
P.O. Box 61232, MARSHALLTOWN, 2107
TEL: +27 (0)11 218 3000
FAX: +27(0)11 218 3100
www.worleyparsons.com
WorleyParsons RSA (Pty) Ltd.

MESCH arquitectos

CLIENT

MOZAMBIQUE GAS DEVELOPMENT PROJECT

Anadarko Moçambique Área 1, Lda

PROJECT
AMA 1
RESETTLEMENT VILLAGE

DRAWING DESCRIPTION
CASA DE REASSENTAMENTO TIPO B (2 ÁGUAS) - ALÇADOS LATERAIS
RESETTLEMENT HOUSE TYPE B - SIDE ELEVATIONS

SCALE	DATE
A3@ 1:50	NOV 2015

DRAWING NUMBER:	REV Nº
C00290-00-AR-DEL-0001-002	0

ANADARKO DRAWING NUMBER:
EA-MZ-CI0100-WOR-E05-00105-02

ESTE DESENHO É PARA SER LIDO EM CONJUNTO COM:

THIS DRAWING IS TO BE READ IN CONJUCTION WITH:

ARCHITECTURAL
EA-MZ-CI0100-WOR-E04-01604-01
EA-MZ-CI0100-WOR-E05-01601-01
EA-MZ-CI0100-WOR-E04-01605-01
EA-MZ-CI0100-WOR-E05-00100-01
EA-MZ-CI0100-WOR-E05-00105-02
EA-MZ-CI0100-WOR-E05-01606-01
EA-MZ-CI0100-WOR-E05-01609-01
EA-MZ-CI0100-WOR-E05-01610-01
EA-MZ-CI0100-WOR-E05-00150-01
EA-MZ-CI0100-WOR-E05-01614-01

STRUCTURAL
EA-MZ-CI0100-WOR-E04-00001-01
EA-MZ-CI0100-WOR-E04-00002-01
EA-MZ-CI0100-WOR-E05-00010-01
EA-MZ-CI0100-WOR-E05-00001-01
EA-MZ-CI0100-WOR-E05-00002-01
EA-MZ-CI0100-WOR-E05-00003-01

WATER
EA-MZ-CI0100-WOR-E05-00120-01

ELECTRICAL
EA-MZ-CI0000-WOR-E02-00002-01
EA-MZ-CI0000-WOR-E02-00002-02

Metal roof sheeting 0.6mm IBR @23° pitch on 50x76 graded SA pine battens with Sisalation 405 roof underlay fixed to prefabricated roof trusses to eng. specs

Cobertura metalica 0.6mm IBR @23º inclinação sobre ripas 50x76 com isolamento Sisolation 405 de acordo com desenho de eng.

PVC pre-coloured gutter fixed to wood facia board to manufacturers details

Caleira em PVC de acordo com especificações do fabricante

Concrete block work plastered & painted(interior & exterior) refer to finishing schedule

Parede em blocos rebocado & pintura (interior & exterior) de acordo com mapa de acabamentos

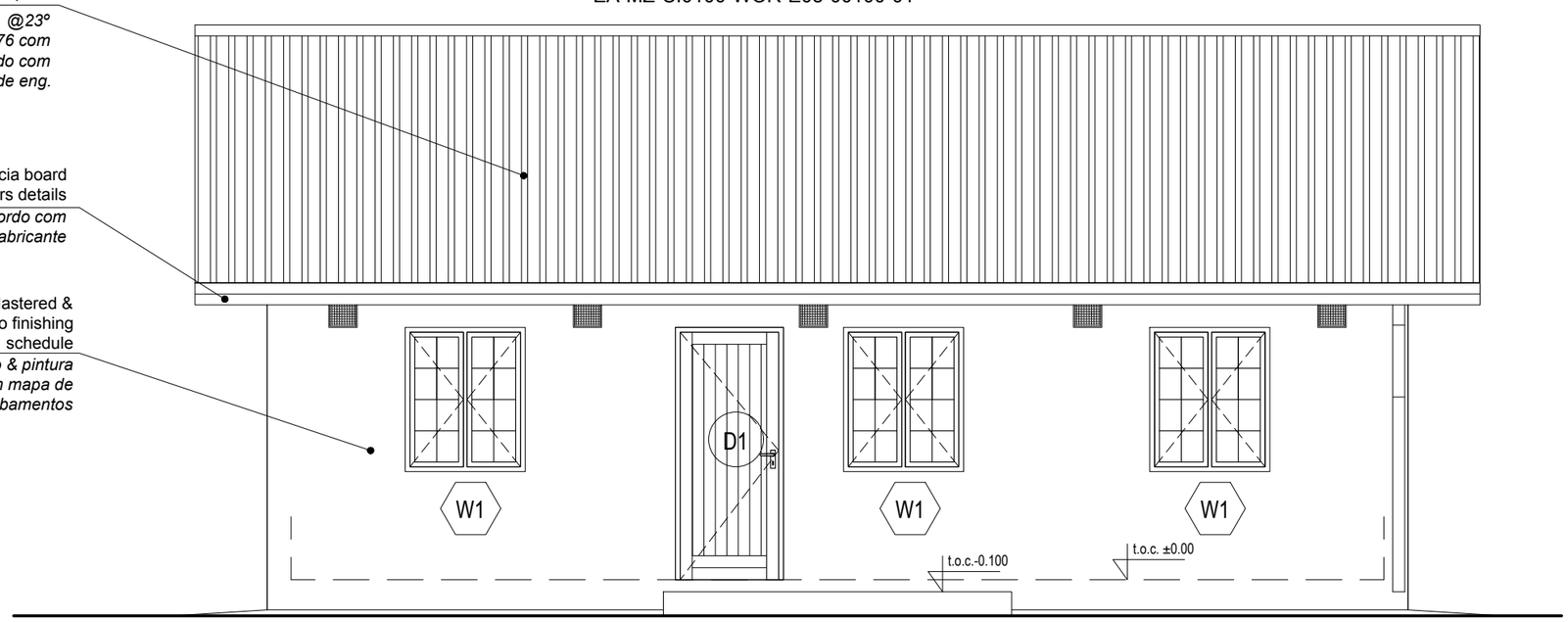

ALÇADO FRONTAL
Front Elevation
ESCALA/Scale 1:50

Metal roof sheeting 0.6mm @23° pitch on 50x76 graded SA pine battens with Sisalation 405 roof underlay fixed to prefabricated roof trusses to eng. specs

Cobertura metalica 0.6mm IBR @23º inclinação sobre ripas 50x76 com isolamento Sisolation 405 de acordo com desenho de eng.

PVC pre-coloured gutter fixed to wood facia board to manufacturers details

Caleira em PVC de acordo com especificações do fabricante

Concrete block (200x400x200mm) work plastered & painted(interior & exterior) refer to finishing schedule

Parede em blocos (200x400x200mm) rebocado & pintura (interior & exterior) de acordo com mapa de acabamentos

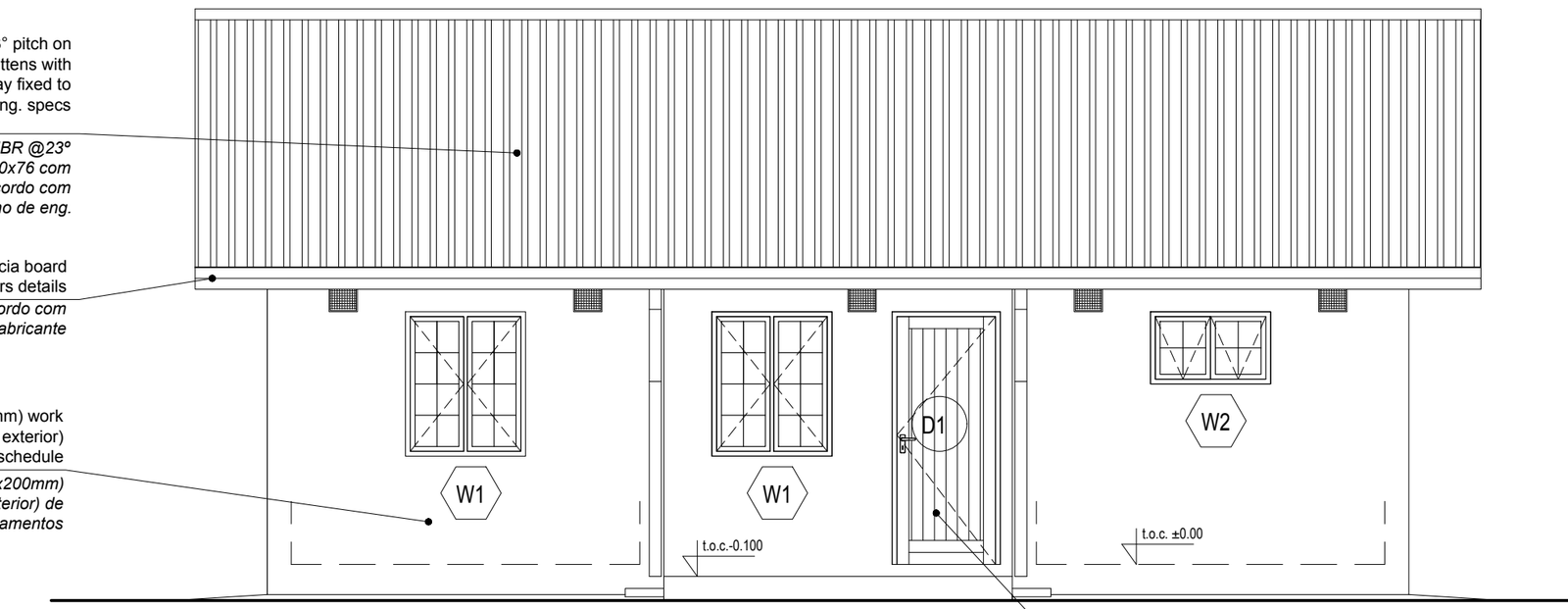

Solid treated timber door, refer to schedule

Porta em madeira, ver mapa de vãos

ALÇADO POSTERIOR
Back Elevation
ESCALA/Scale 1:50

ISSUED FOR CONSTRUCTION

WorleyParsons RSA retains the copyright in all intellectual property, including designs and/or documents prepared in terms of this appointment for the project covered by the appointment. The client may use the designs and/or documents for the sole purpose of their intended use on this project only subject to payment for the design having been received. Use for any other purpose, whether or not the design and/or documents have been paid for constitutes an infringement of copyright, and all rights are reserved.

All dimensions must be verified on site before the works commence. Refer any discrepancies to the Engineer.

Copyright reserved

REVISIONS

NO.	DATE	CHK	DONE BY	DESCRIPTION
A	21/07/15	MM	AP	ISSUED INTERNAL REVIEW
B	21/07/15	MM	AP	ISSUED FOR DETAIL DESIGN
C	21/07/15	MM	AP	ISSUED FOR SQUAD CHECK
D	01/10/15	MM	AP	ISSUED FOR CLIENT REVIEW
E	16/11/15	MM	AP	ISSUED CLIENT APPROVAL
0	25/11/15	MM	AP	ISSUED FOR CONSTRUCTION

WorleyParsons
resources & energy
39 MELROSE BOULEVARD, MELROSE ARCH, JOHANNESBURG
P.O. Box 61232, MARSHALLTOWN, 2107
TEL: +27 (0)11 218 3000
FAX: +27(0)11 218 3100
www.worleyparsons.com
WorleyParsons RSA (Pty) Ltd.

MESCH arquitectos

CLIENT

MOZAMBIQUE GAS DEVELOPMENT PROJECT

Anadarko Moçambique Área 1, Lda

PROJECT
AMA 1
RESETTLEMENT
VILLAGE

DRAWING DESCRIPTION
CASA DE REASSENTAMENTO TIPO B (2 ÁGUAS) - ALÇADOS FRONTAL E POSTERIOR
RESETTLEMENT HOUSE TYPE B - FRONT & BACK ELEVATIONS

SCALE	DATE
A3@ 1:50	NOV 2015

DRAWING NUMBER:	REV Nº
C00290-00-AR-DEL-0004-001	0

ANADARKO DRAWING NUMBER:
EA-MZ-CI0100-WOR-E05-00105-01

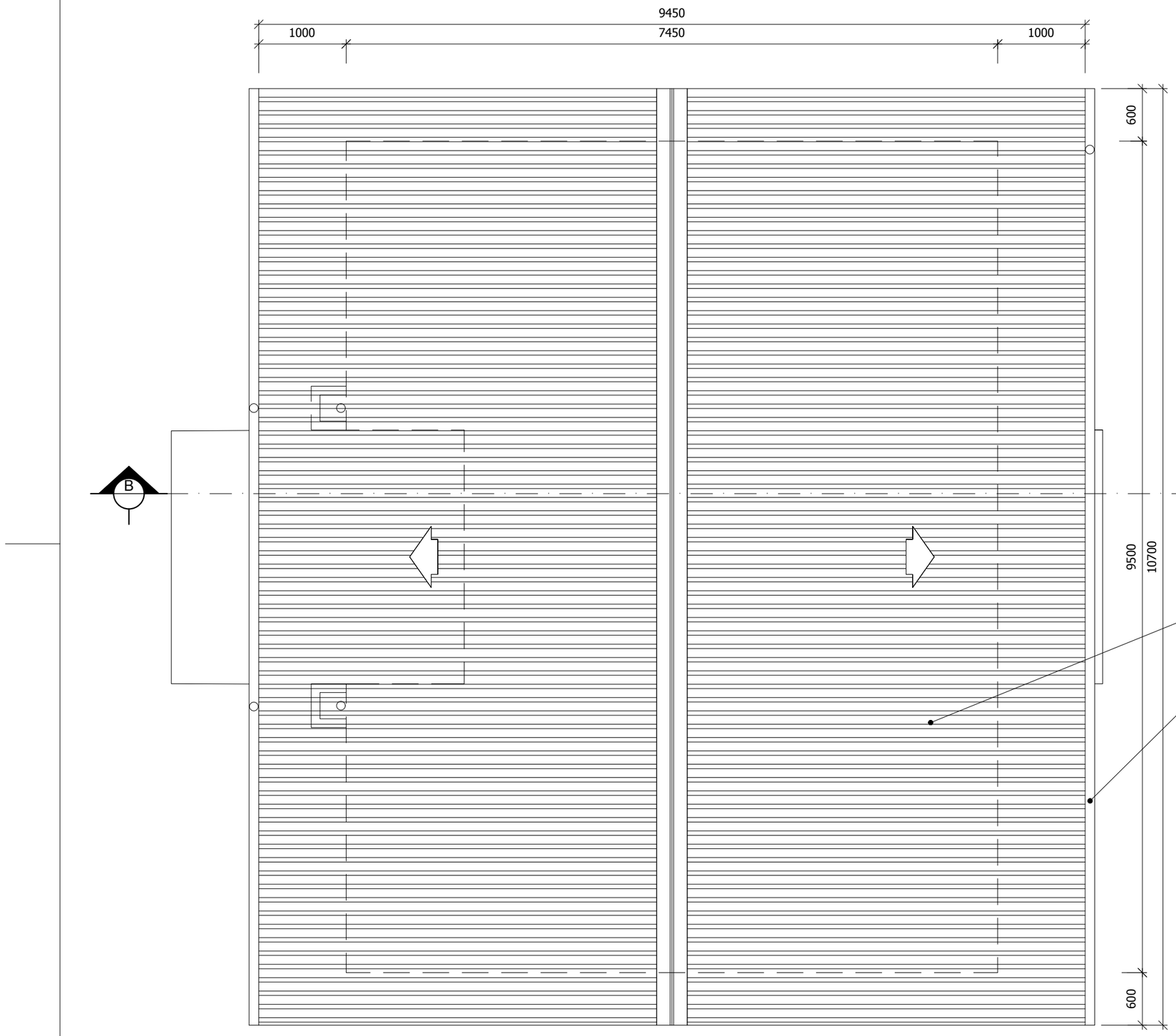

Metal roof sheeting 0.6mm IBR @23° pitch on 50x76 graded SA pine battens with Sisalation 405 roof underlay fixed to prefabricated roof trusses to eng. specs

Cobertura metalica 0.6mm IBR @23º inclinação sobre ripas 50x76 com isolamento Sisalation 405 de acordo com desenho de eng.

PVC pre-coloured gutter fixed to wood facia board to manufacturers details

Caleira em PVC de acordo com especificações do fabricante

ESTE DESENHO É PARA SER LIDO EM CONJUNTO COM:

THIS DRAWING IS TO BE READ IN CONJUCTION WITH:

ARCHITECTURAL
EA-MZ-CI0100-WOR-E04-01604-01
EA-MZ-CI0100-WOR-E04-01605-01
EA-MZ-CI0100-WOR-E05-00105-01
EA-MZ-CI0100-WOR-E05-00105-02
EA-MZ-CI0100-WOR-E05-01606-01

STRUCTURAL
EA-MZ-CI0100-WOR-E04-00001-01
EA-MZ-CI0100-WOR-E04-00002-01
EA-MZ-CI0100-WOR-E05-00010-01
EA-MZ-CI0100-WOR-E05-00001-01
EA-MZ-CI0100-WOR-E05-00002-01
EA-MZ-CI0100-WOR-E05-00003-01

WATER
EA-MZ-CI0100-WOR-E05-00120-01

ELECTRICAL
EA-MZ-CI0000-WOR-E02-00002-01
EA-MZ-CI0000-WOR-E02-00002-02

ISSUED FOR CONSTRUCTION

WorleyParsons RSA retains the copyright in all intellectual property, including designs and/or documents prepared in terms of this appointment for the project covered by the appointment. The client may use the designs and/or documents for the sole purpose of their intended use on this project only subject to payment for the design having been received. Use for any other purpose, whether or not the design and/or documents have been paid for constitutes an infringement of copyright, and all rights are reserved.

All dimensions must be verified on site before the works commence. Refer any discrepancies to the Engineer.

Copyright reserved

REVISIONS

NO.	DATE	CHK	DONE BY	DESCRIPTION
A	21/07/15	MM	AP	ISSUED INTERNAL REVIEW
B	21/07/15	MM	AP	ISSUED FOR DETAIL DESIGN
C	21/07/15	MM	AP	ISSUED FOR SQUAD CHECK
D	01/10/15	MM	AP	ISSUED FOR CLIENT REVIEW
E	16/11/15	MM	AP	ISSUED CLIENT APPROVAL
0	25/11/15	MM	AP	ISSUED FOR CONSTRUCTION

WorleyParsons
resources & energy
39 MELROSE BOULEVARD, MELROSE ARCH, JOHANNESBURG
P.O. Box 61232, MARSHALLTOWN, 2107
TEL: +27 (0)11 218 3000
FAX: +27(0)11 218 3100
www.worleyparsons.com
WorleyParsons RSA (Pty) Ltd.

MESCH arquitectos

CLIENT

MOZAMBIQUE GAS DEVELOPMENT PROJECT

Anadarko Moçambique Área 1, Lda

PROJECT
AMA 1
RESETTLEMENT
VILLAGE

DRAWING DESCRIPTION
CASA DE REASSENTAMENTO - PLANTA DE COBERTURA TIPO B (2 ÁGUAS)
RESETTLEMENT HOUSE - ROOF PLAN TYPE B (2 PITCHED)

SCALE	DATE
A3@ 1:50	NOV 2015

DRAWING NUMBER:	REV Nº
C00290-00-AR-DLP-0049-001	0

ANADARKO DRAWING NUMBER:
EA-MZ-CI0100-WOR-E05-00100-01

18. REPLACEMENT VILLAGE

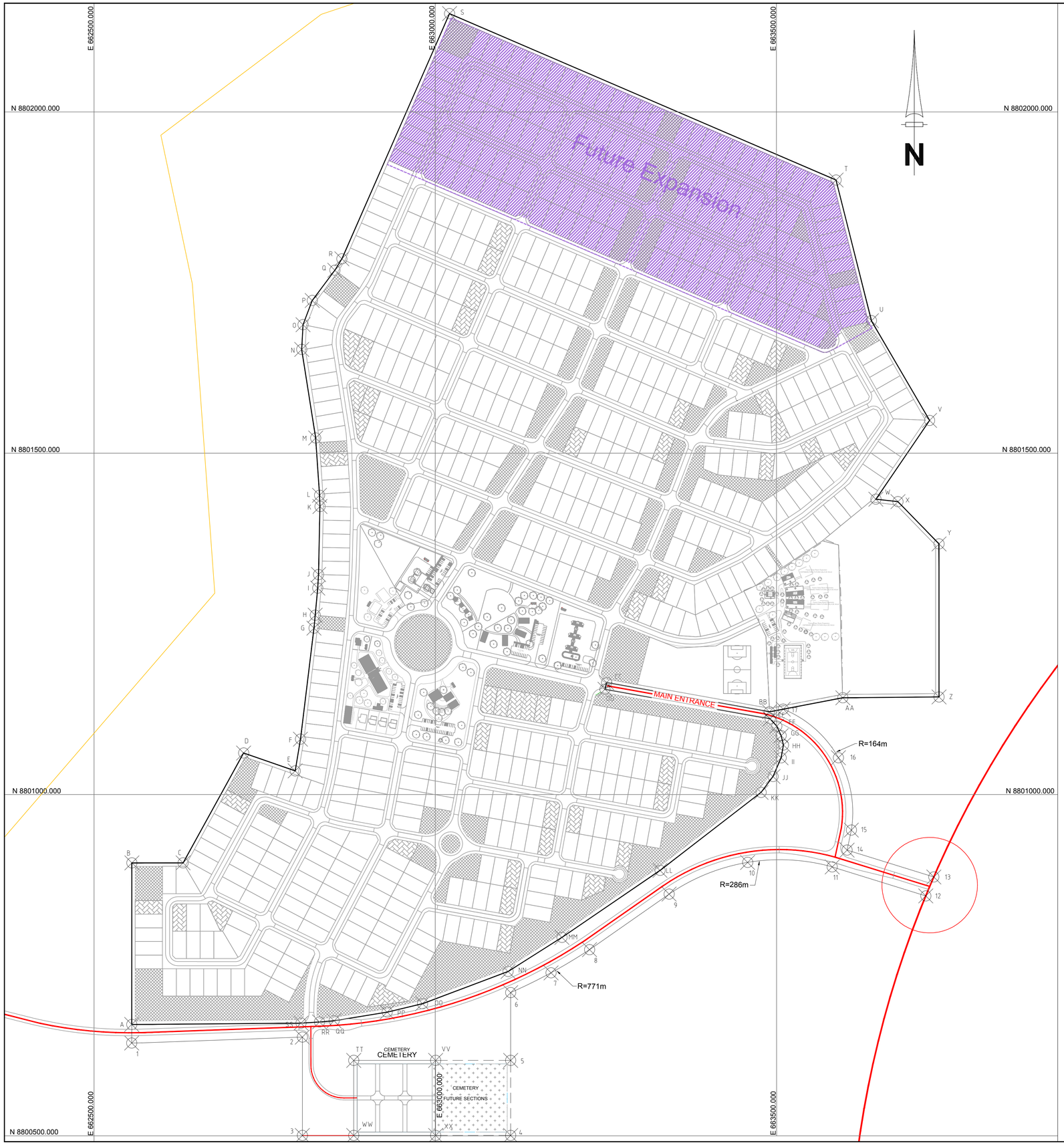

RESETTLEMENT VILLAGE RESERVE BOUNDARY

LAYOUT COORDINATES UTM84 37S

POINT	N	E
A	8800663.043	662555.237
B	8800899.791	662555.436
C	8800899.807	662630.486
D	8801060.803	662719.215
E	8801034.554	662794.764
F	8801081.094	662802.531
G	8801243.758	662822.347
H	8801262.686	662824.116
I	8801302.424	662827.863
J	8801322.207	662829.012
K	8801421.952	662831.061
L	8801438.392	662830.479
M	8801522.246	662824.815
N	8801652.055	662804.330
O	8801688.341	662806.293
P	8801723.748	662819.788
Q	8801768.091	662852.959
R	8801784.762	662863.157
S	8802144.075	663021.037
T	8801900.218	663587.430
U	8801694.169	663639.239
V	8801548.022	663724.493
W	8801432.656	663645.801
X	8801429.054	663678.097
Y	8801367.140	663738.304
Z	8801142.915	663738.304

LAYOUT COORDINATES UTM84 37S

POINT	N	E
1	8800635.886	662555.214
2	8800644.574	662805.313
3	8800500.425	662805.313
4	8800500.425	663110.587
5	8800610.421	663110.587
6	8800709.723	663110.587
7	8800738.716	663169.730
8	8800772.651	663226.183
9	8800854.054	663342.778
10	8800900.473	663457.844
11	8800893.880	663581.745
12	8800851.391	663718.924
13	8800879.154	663730.686
14	8800918.534	663603.546
15	8800947.848	663609.889
16	8801053.887	663590.873
17	8801125.056	663509.998

LAYOUT COORDINATES UTM84 37S

POINT	N	E
AA	8801141.679	663597.360
BB	8801121.198	663489.723
EE	8801110.835	663490.854
FF	8801100.105	663500.534
GG	8801086.202	663506.954
HH	8801072.522	663510.356
II	8801053.722	663506.892
JJ	8801026.368	663495.046
KK	8801003.064	663477.514
LL	8800888.794	663329.462
MM	8800790.662	663185.674
NN	8800740.731	663106.752
OO	8800693.530	662981.370
PP	8800681.130	662929.531
QQ	8800668.478	662851.792
RR	8800666.715	662830.372
SS	8800665.003	662803.307
TT	8800610.425	662880.587
VV	8800610.425	663000.587
WW	8800500.425	662880.587
XX	8800500.425	663000.587

SCALE FOR REDUCED PLAN
0 10 20 30 40 50
50mm ON ORIGINAL DRAWING

NOTES

LEGEND

VILLAGE ACCESS ROAD

FUTURE DEVELOPMENT BOUNDARY

REFRENCE DWG's No:

1. EA-MZ-CI000-WOR-E04-00044-01
2. EA-MZ-CI000-WOR-E04-00078-01

ISSUED FOR CONSTRUCTION

WorleyParsons RSA retains the copyright in all intellectual property, including designs and/or documents prepared in terms of this appointment for the project covered by the appointment. The client may use the designs and/or documents for the sole purpose of their intended use on this project only subject to payment for the design having been received. Use for any other purpose, whether or not the design and/or documents have been paid for constitutes an infringement of copyright, and all rights are reserved.

All dimensions must be verified on site before the works commence. Refer any discrepancies to the Engineer.

Copyright reserved

REVISIONS

NO.	DATE	CHECKED	DONE BY	DESCRIPTION
A	04/08/15	D. d T.	A.U.	ISSUED FOR INTERNAL REVIEW
B	12/08/15	D. d T.	A.U.	ISSUED FOR DETAIL DESIGN
C	11/09/15	D. d T.	A.U.	ISSUED FOR SQUAD CHECK
D	30/09/15	D. d T.	A.U.	ISSUED FOR CLIENT REVIEW
E	25/11/15	D. d T.	C.T.	ISSUED FOR CLIENT APPROVAL
0	25/11/15	D. d T.	C.T.	ISSUED FOR CONSTRUCTION

WorleyParsons
resources & energy
39 MELROSE BOULEVARD, MELROSE ARCH, JOHANNESBURG
P.O. Box 61232, MARSHALLTOWN, 2107
TEL: +27 (0)11 218 3000
FAX: +27(0)11 218 3100
www.worleyparsons.com
WorleyParsons RSA (Pty) Ltd.

	NAME	SIGNATURE	DATE
DRAWN BY:	A.UJMA		12/08/2015
CHECKED:	D. du TOIT		12/08/2015
DESIGNER:	R. van SCHALKWYK		12/08/2015
PR ENG:	D. du TOIT Pr. No. 201170110		12/08/2015
PROJECT ENG MANAGER:	L. PADAYACHEE Pr. No.		
LOCAL PR ENG:			
CLIENT:			

CLIENT

MOZAMBIQUE GAS DEVELOPMENT PROJECT

Anadarko Moçambique Área 1, Lda

PROJECT
AMA 1
RESETTLEMENT
VILLAGE

DRAWING DESCRIPTION
RESETTLEMENT
VILLAGE
BOUDARY LAYOUT

SCALE 1:3 000 ORIGINAL DWG SIZE A1

DATE DECEMBER 2015

DRAWING NUMBER C00290-00-TP-DAL-0003-001

REV NO 0

ANADARKO DRAWING NUMBER EA-MZ-CI0000-WOR-E04-00044-01

Notes:

1.All Light switches to be at 1400mm A.F.F.L

2.Light switches to be intalled 150mm from corner of rooms or door frames

3.Measurements are to centre of switch

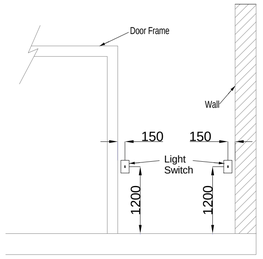

Typical Light Switch Mounting detail

1 Detail - Typical Light Switch Installation Details

1 : 100

Notes:

1.All sockets are installed at 300mm AFFL unless otherwise indicated on the drawing.

2.Sockets in corners to be 150mm away from walls

3.All measurements are to the centre of the sockets

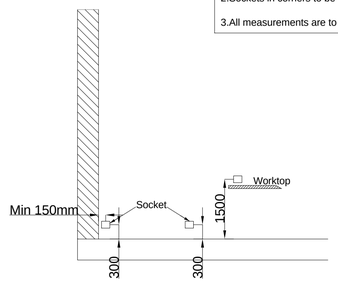

TYPICAL SOCKET MOUNTING DETAIL

2 Detail - Typical Socket Outlet Installation Details

1 : 100

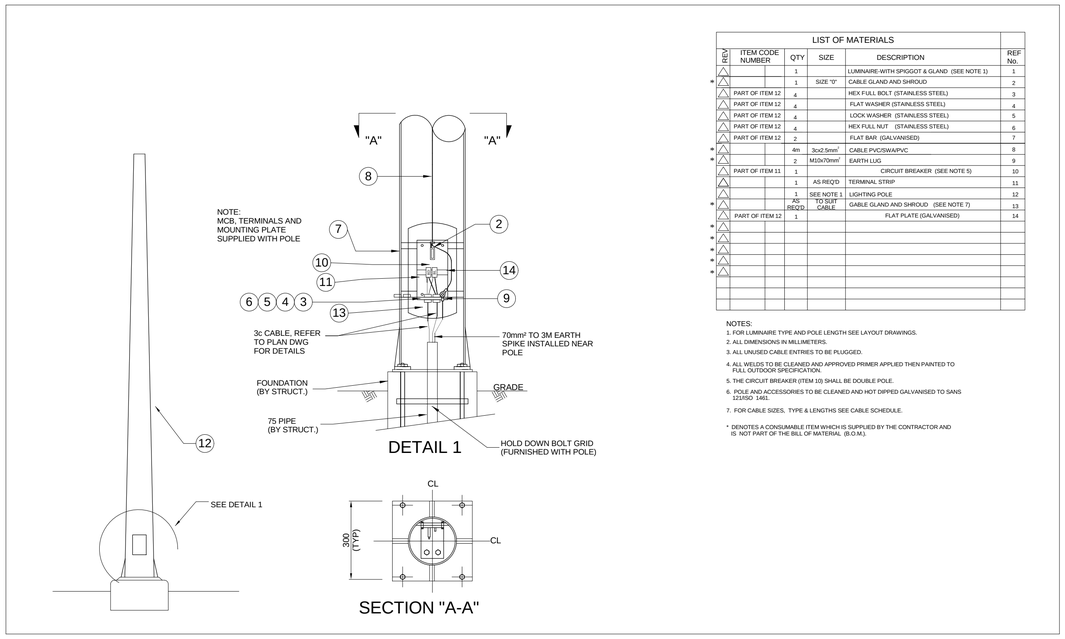

LIST OF MATERIALS

REV	ITEM CODE NUMBER	QTY	SIZE	DESCRIPTION	REF No.
		1		LUMINAIRE-WITH SPIGGOT & GLAND (SEE NOTE 1)	1
*		1	SIZE "D"	CABLE GLAND AND SHROUD	2
	PART OF ITEM 12	4		HEX FULL BOLT (STAINLESS STEEL)	3
	PART OF ITEM 12	4		FLAT WASHER (STAINLESS STEEL)	4
	PART OF ITEM 12	4		LOCK WASHER (STAINLESS STEEL)	5
	PART OF ITEM 12	4		HEX FULL NUT (STAINLESS STEEL)	6
	PART OF ITEM 12	2		FLAT BAR (GALVANISED)	7
*		4m	3cx2.5mm²	CABLE PVC/SWA/PVC	8
*		2	M10x70mm²	EARTH LUG	9
	PART OF ITEM 11	1		CIRCUIT BREAKER (SEE NOTE 5)	10
		1	AS REQ'D	TERMINAL STRIP	11
		1	SEE NOTE 1	LIGHTING POLE	12
*		AS REQ'D	TO SUIT CABLE	GABLE GLAND AND SHROUD (SEE NOTE 7)	13
	PART OF ITEM 12	1		FLAT PLATE (GALVANISED)	14
*					
*					
*					
*					
*					

NOTES:
1. FOR LUMINAIRE TYPE AND POLE LENGTH SEE LAYOUT DRAWINGS.
2. ALL DIMENSIONS IN MILLIMETERS.
3. ALL UNUSED CABLE ENTRIES TO BE PLUGGED.
4. ALL WELDS TO BE CLEANED AND APPROVED PRIMER APPLIED THEN PAINTED TO FULL OUTDOOR SPECIFICATION.
5. THE CIRCUIT BREAKER (ITEM 10) SHALL BE DOUBLE POLE.
6. POLE AND ACCESSORIES TO BE CLEANED AND HOT DIPPED GALVANISED TO SANS 121/ISO 1461.
7. FOR CABLE SIZES, TYPE & LENGTHS SEE CABLE SCHEDULE.

* DENOTES A CONSUMABLE ITEM WHICH IS SUPPLIED BY THE CONTRACTOR AND IS NOT PART OF THE BILL OF MATERIAL (B.O.M.).

3 Detail - Typical Site Lighting Wiring Details

1 : 1500

SCALE FOR REDUCED PLAN
0 10 20 30 40 50
50mm ON ORIGINAL DRAWING

NOTES

DRAWING NUMBER	REFERENCE DRAWING DESCRIPTION

ISSUED FOR CONSTRUCTION

WorleyParsons RSA retains the copyright in all intellectual property, including designs and/or documents prepared in terms of this appointment for the project covered by the appointment. The client may use the designs and/or documents for the sole purpose of their intended use on this project only subject to payment for the design having been received. Use for any other purpose, whether or not the design and/or documents have been paid
for constitutes an infringement of copyright, and all rights are reserved.

All dimensions must be verified on site before the works commence. Refer any discrepancies to the Engineer.

Copyright reserved

REVISIONS

NO.	DATE	CHECKED	DONE BY	DESCRIPTION
A	16/10/15	TM	CB	Issued for Peer Review
B	16/10/15	TM	CB	Issued for Detailed Design
C	21/10/15	TM	SB	Issued for Squad Check
D	23/10/15	TM	CB	Issued for Client Review
E	17/11/15	TM	CB	Issued for Client Approval
0	04/12/15	TM	SB	Issued for Construction

WorleyParsons
resources & energy
39 MELROSE BOULEVARD, MELROSE ARCH, JOHANNESBURG
P.O. Box 61232, MARSHALLTOWN, 2107
TEL: +27 (0)11 218 3000
FAX: +27(0)11 218 3100
www.worleyparsons.com
WorleyParsons RSA (Pty) Ltd.

	NAME	SIGNATURE	DATE
DRAWN BY:	C Brandsen		16/10/15
CHECKED:	T Meyer		21/10/15
DESIGNER:	C Brandsen		16/10/15
PR ENG:	W Snyman 20050166		21/10/15
PROJECT ENG MANAGER:	L Padayachee		21/10/15
LOCAL PR ENG:			
CLIENT:			

CLIENT

MOZAMBIQUE GAS DEVELOPMENT PROJECT

Anadarko Moçambique Área 1, Lda

PROJECT

AMA1 RESETTLEMENT VILLAGE

DRAWING DESCRIPTION

Resettlement Village Typical Drawings

SCALE	DATE
As indicated ORIGINAL DWG SIZE A1	DECEMBER 2015

DRAWING NUMBER	REV NO
C00290-00-EL-DES-0001-002	0

ANADARKO DRAWING NUMBER

EA-MZ-CI0000-WOR-E02-00027-02

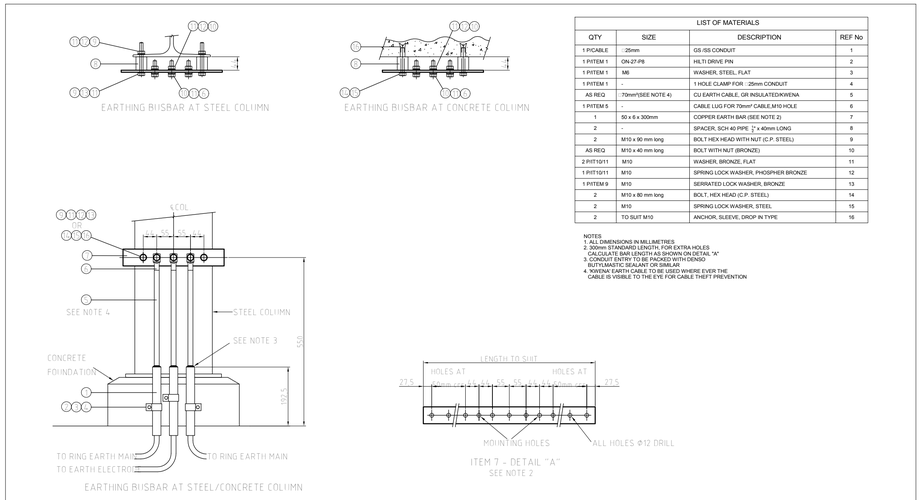

LIST OF MATERIALS			
QTY	SIZE	DESCRIPTION	REF No
1 PICABLE	- 25mm	GS ISS CONDUIT	1
1 PITEM 1	ON-27-P8	HILTI DRIVE PIN	2
1 PITEM 1	M8	WASHER, STEEL, FLAT	3
1 PITEM 1	-	1 HOLE CLAMP FOR - 25mm CONDUIT	4
AS REQ	70mm²(SEE NOTE 4)	CU EARTH CABLE, GR INSULATED/KWENA	5
1 PITEM 5	-	CABLE LUG FOR 70mm² CABLE,M10 HOLE	6
1	50 x 6 x 300mm	COPPER EARTH BAR (SEE NOTE 2)	7
2	-	SPACER, SCH 40 PIPE 1" x 40mm LONG	8
2	M10 x 90 mm long	BOLT HEX HEAD WITH NUT (C.P. STEEL)	9
AS REQ	M10 x 40 mm long	BOLT WITH NUT (BRONZE)	10
2 PIT1/1011	M10	WASHER, BRONZE, FLAT	11
1 PIT1/1011	M10	SPRING LOCK WASHER, PHOSPHER BRONZE	12
1 PITEM 9	M10	SERRATED LOCK WASHER, BRONZE	13
2	M10 x 80 mm long	BOLT, HEX HEAD (C.P. STEEL)	14
2	M10	SPRING LOCK WASHER, STEEL	15
2	TO SUIT M10	ANCHOR, SLEEVE, DROP IN TYPE	16

NOTES
1. ALL DIMENSIONS IN MILLIMETRES
2. 300 IS STANDARD LENGTH. FOR EXTRA HOLES CALCULATE BAR LENGTH AS SHOWN ON DETAIL "A"
3. CONDUIT ENTRY TO BE PACKED WITH DENSO BUTYLMASTIC SEALANT OR SIMILAR
4. %WENA EARTH CABLE TO BE USED WHERE EVER THE CABLE IS VISIBLE TO THE EYE FOR CABLE THEFT PREVENTION

1 Detail - Typical Earth Bar Steel/Concrete Column Installation Details
1 : 100

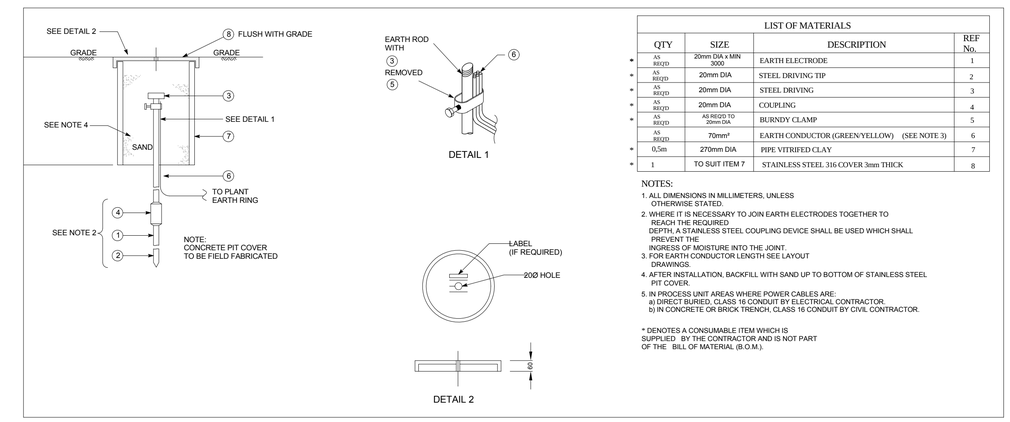

LIST OF MATERIALS			
QTY	SIZE	DESCRIPTION	REF No.
* AS REQ'D	20mm DIA x MIN 3000	EARTH ELECTRODE	1
* AS REQ'D	20mm DIA	STEEL DRIVING TIP	2
* AS REQ'D	20mm DIA	STEEL DRIVING	3
* AS REQ'D	20mm DIA	COUPLING	4
* AS REQ'D	AS REQ'D TO 20mm DIA	BURNDY CLAMP	5
AS REQ'D	70mm²	EARTH CONDUCTOR (GREEN/YELLOW) (SEE NOTE 3)	6
* 0,5m	270mm DIA	PIPE VITRIFIED CLAY	7
* 1	TO SUIT ITEM 7	STAINLESS STEEL 316 COVER 3mm THICK	8

NOTES:
1. ALL DIMENSIONS IN MILLIMETERS, UNLESS OTHERWISE STATED.
2. WHERE IT IS NECESSARY TO JOIN EARTH ELECTRODES TOGETHER TO REACH THE REQUIRED DEPTH, A STAINLESS STEEL COUPLING DEVICE SHALL BE USED WHICH SHALL PREVENT THE INGRESS OF MOISTURE INTO THE JOINT.
3. FOR EARTH CONDUCTOR LENGTH SEE LAYOUT DRAWINGS.
4. AFTER INSTALLATION, BACKFILL WITH SAND UP TO BOTTOM OF STAINLESS STEEL PIT COVER.
5. IN PROCESS UNIT AREAS WHERE POWER CABLES ARE:
   a) DIRECT BURIED, CLASS 16 CONDUIT BY ELECTRICAL CONTRACTOR.
   b) IN CONCRETE OR BRICK TRENCH, CLASS 16 CONDUIT BY CIVIL CONTRACTOR.

* DENOTES A CONSUMABLE ITEM WHICH IS SUPPLIED BY THE CONTRACTOR AND IS NOT PART OF THE BILL OF MATERIAL (B.O.M.).

2 Detail - Typical Earth Well & Electrode Installation Details
1 : 1500

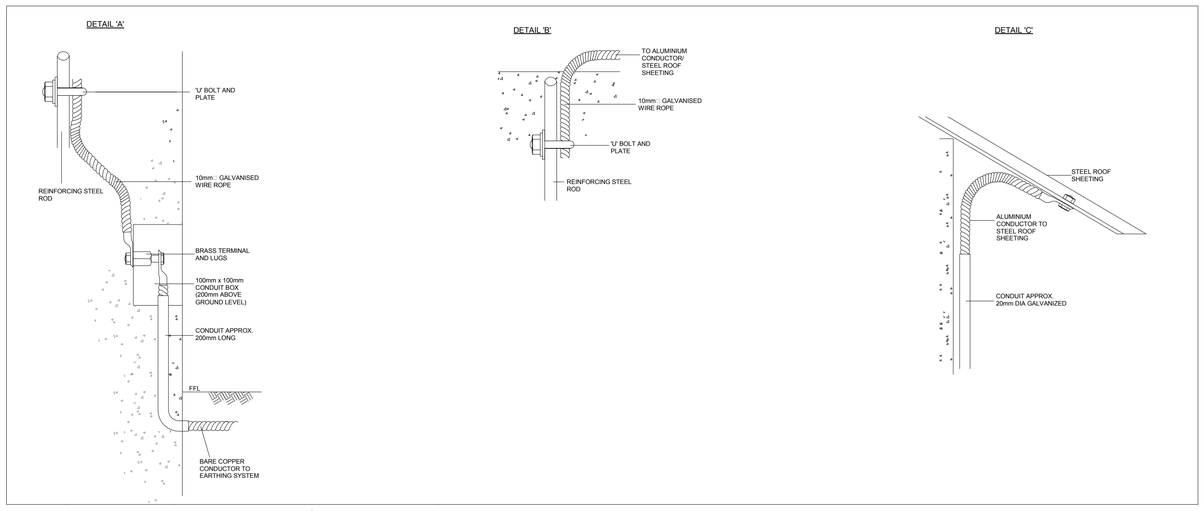

3 Detail - Typical Rebar and Sheet Metal Earthing Details
1 : 1500

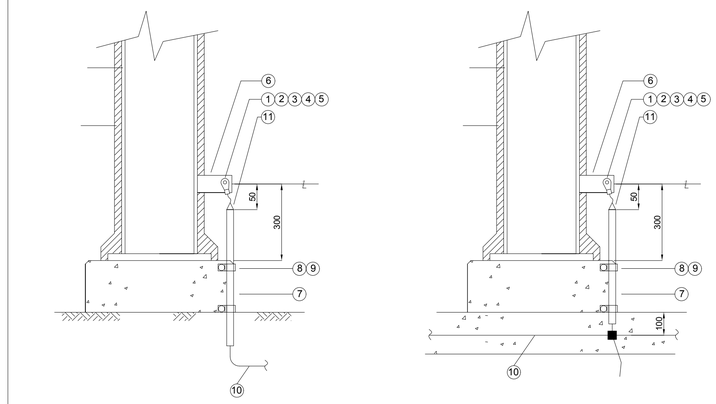

LIST OF MATERIALS			
QTY	SIZE	DESCRIPTION	REF No.
1	M10 x 70mm²	CABLE LUG	1
1	M10 x 50	HEX HEAD BOLT (NICKEL PLATED BRASS TO BS EN 2874)	2
1	M10	FLAT WASHER (NICKEL PLATED BRASS TO BS EN 2874)	3
1	M10	HEX FULL NUT (NICKEL PLATED BRASS TO BS EN 2874)	4
1	M10	SERRATED LOCK WASHER (NICKEL PLATED BRASS TO BS EN 2874)	5
1	125 x 50 x 6	FLAT BAR (GALVANISED) (SEE NOTE 3)	6
AS REQ'D	25 DIA	CONDUIT (GALVANISED)	7
2	25 DIA	P-CLIP (STAINLESS STEEL)	8
2	M6	RAWL BOLT (EXPANDER PLUG)	9
AS REQ'D	70mm²	EARTH CONDUCTOR (GREEN/YELLOW) (SEE NOTE 2)	10
AS REQ'D		DENSO BUTYLMASTIC SEALANT	11

NOTES:
1. ALL DIMENSIONS IN MILLIMETERS, UNLESS OTHERWISE STATED.
2. FOR EARTH CONDUCTOR LENGTH SEE LAYOUT DRAWINGS.
3. EARTH TAG TO PROTRUDE THROUGH FIREPROOFING SO AS TO GIVE CLEAR ACCESS TO EARTH CONNECTION BOLT.

4 Detail - Typical Steel Column Earthing Installation Details
1 : 200

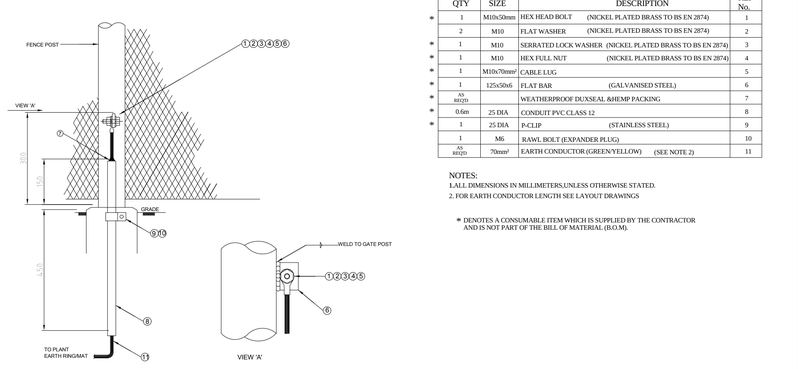

LIST OF MATERIALS			
QTY	SIZE	DESCRIPTION	REF No.
* 1	M10x50mm	HEX HEAD BOLT (NICKEL PLATED BRASS TO BS EN 2874)	1
2	M10	FLAT WASHER (NICKEL PLATED BRASS TO BS EN 2874)	2
* 1	M10	SERRATED LOCK WASHER (NICKEL PLATED BRASS TO BS EN 2874)	3
* 1	M10	HEX FULL NUT (NICKEL PLATED BRASS TO BS EN 2874)	4
* 1	M10x70mm²	CABLE LUG	5
* 1	125x50x6	FLAT BAR (GALVANISED STEEL)	6
* AS REQ'D		WEATHERPROOF DUXSEAL &HEMP PACKING	7
* 0,6m	25 DIA	CONDUIT PVC CLASS 12	8
* 1	25 DIA	P-CLIP (STAINLESS STEEL)	9
1	M6	RAWL BOLT (EXPANDER PLUG)	10
AS REQ'D	70mm²	EARTH CONDUCTOR (GREEN/YELLOW) (SEE NOTE 2)	11

NOTES:
1.ALL DIMENSIONS IN MILLIMETERS,UNLESS OTHERWISE STATED.
2. FOR EARTH CONDUCTOR LENGTH SEE LAYOUT DRAWINGS

* DENOTES A CONSUMABLE ITEM WHICH IS SUPPLIED BY THE CONTRACTOR AND IS NOT PART OF THE BILL OF MATERIAL (B.O.M).

5 Detail - Typical Steel Fence Post Earthing Installation Details
1 : 2000

SCALE FOR REDUCED PLAN
0 10 20 30 40 50
50mm ON ORIGINAL DRAWING

NOTES

DRAWING NUMBER	REFERENCE DRAWING DESCRIPTION

ISSUED FOR CONSTRUCTION

WorleyParsons RSA retains the copyright in all intellectual property, including designs and/or documents prepared in terms of this appointment for the project covered by the appointment. The client may use the designs and/or documents for the sole purpose of their intended use on this project only subject to payment for the design having been received. Use for any other purpose, whether or not the design and/or documents have been paid
for constitutes an infringement of copyright, and all rights are reserved.

All dimensions must be verified on site before the works commence. Refer any discrepancies to the Engineer.

Copyright reserved

REVISIONS

NO.	DATE	CHECKED	DONE BY	DESCRIPTION
A	16/10/15	TM	CB	Issued for Peer Review
B	16/10/15	TM	CB	Issued for Detailed Design
C	21/10/15	TM	SB	Issued for Squad Check
D	23/10/15	TM	CB	Issued for Client Review
E	17/11/15	TM	CB	Issued for Client Approval
0	04/12/15	TM	SB	Issued for Construction

WorleyParsons
resources & energy
39 MELROSE BOULEVARD, MELROSE ARCH, JOHANNESBURG
P.O. Box 61232, MARSHALLTOWN, 2107
TEL: +27 (0)11 218 3000
FAX: +27(0)11 218 3100
www.worleyparsons.com
WorleyParsons RSA (Pty) Ltd.

	NAME	SIGNATURE	DATE
DRAWN BY:	C Brandsen		16/10/15
CHECKED:	T Meyer		21/10/15
DESIGNER:	C Brandsen		16/10/15
PR ENG:	W Snyman 20050166		21/10/15
PROJECT ENG MANAGER:	L Padayachee		21/10/15
LOCAL PR ENG:			
CLIENT:			

CLIENT

MOZAMBIQUE GAS DEVELOPMENT PROJECT

Anadarko Moçambique Área 1, Lda

PROJECT

AMA1 RESETTLEMENT VILLAGE

DRAWING DESCRIPTION

Resettlement Village Typical Drawings

SCALE	DATE
As indicated ORIGINAL DWG SIZE A1	DECEMBER 2015

DRAWING NUMBER: C00290-00-EL-DES-0001-001 REV NO: 0

ANADARKO DRAWING NUMBER: EA-MZ-CI0000-WOR-E02-00027-01

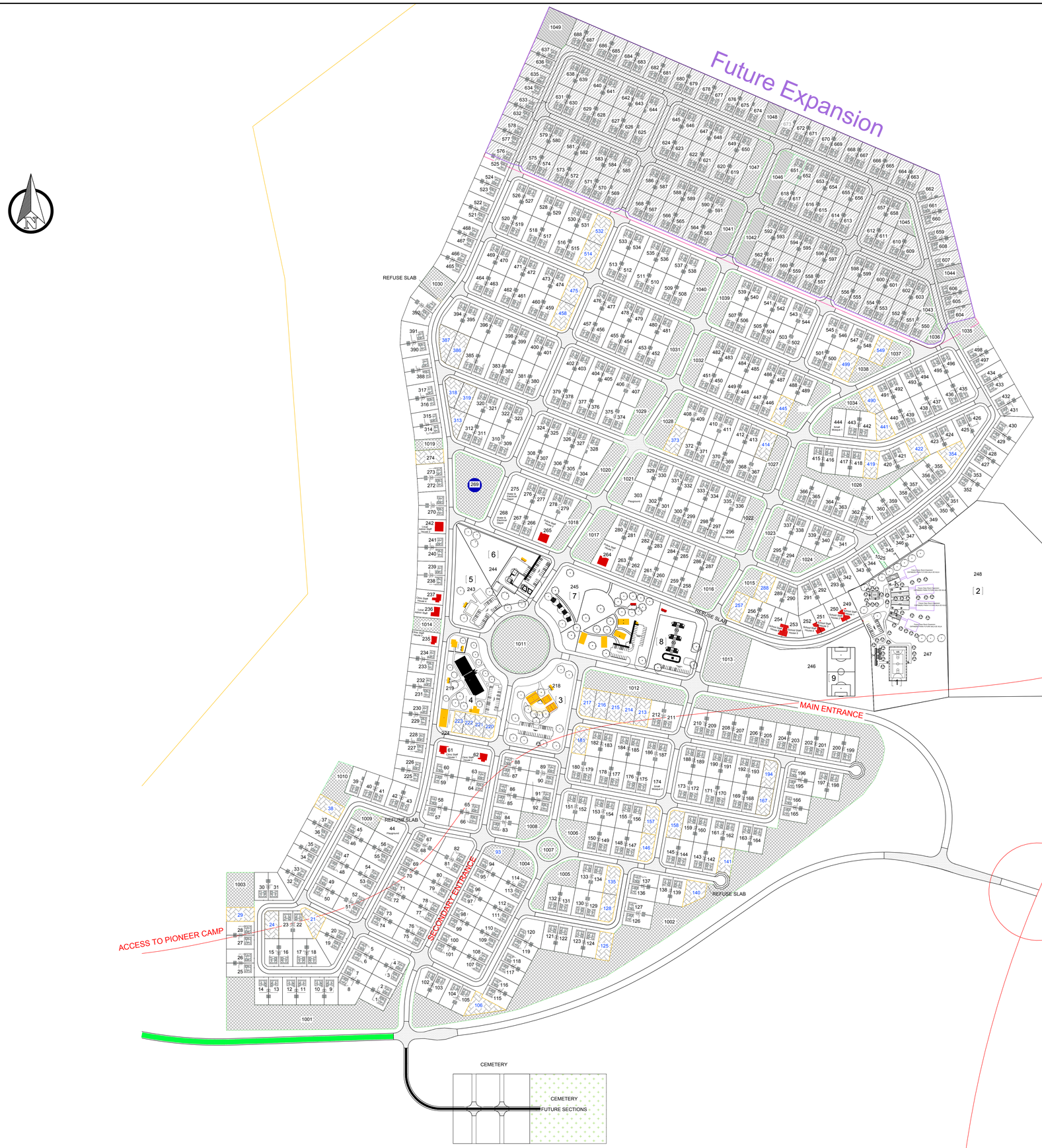

SCALE FOR REDUCED PLAN
0 10 20 30 40 50
50mm ON ORIGINAL DRAWING

NOTES

REFERENCE DRAWINGS:
SITE SETTING OUT CO ORDINATE
C00290-00-TP-DAL-0013-001
C00290-00-TP-DAL-0013-002
C00290-00-TP-DAL-0013-003
C00290-00-TP-DAL-0013-004
C00290-00-TP-DAL-0013-005

ISSUED FOR CONSTRUCTION

WorleyParsons RSA retains the copyright in all intellectual property, including designs and/or documents prepared in terms of this appointment for the project covered by the appointment. The client may use the designs and/or documents for the sole purpose of their intended use on this project only subject to payment for the design having been received. Use for any other purpose, whether or not the design and/or documents have been paid for constitutes an infringement of copyright, and all rights are reserved.

All dimensions must be verified on site before the works commence. Refer any discrepancies to the Engineer.

Copyright reserved

REVISIONS

NO.	DATE	CHECKED	DONE BY	DESCRIPTION
A	16/10/15		AR	ISSUED FOR INTERNAL REVIEW
B	17/10/15		AR	ISSUED FOR DETAIL DESIGN
C	18/10/15		AR	ISSUED FOR SQUAD CHECK
D	18/10/15		AR	ISSUED FOR CLIENT REVIEW
E	25/11/15		CT	ISSUED FOR CLIENT APPROVAL
0	07/12/20	5	CT	ISSUED FOR CONSTRUCTION

WorleyParsons
resources & energy
39 MELROSE BOULEVARD, MELROSE ARCH, JOHANNESBURG
P.O. Box 61232, MARSHALLTOWN, 2107
TEL: +27 (0)11 218 3000
FAX: +27(0)11 218 3100
www.worleyparsons.com
WorleyParsons RSA (Pty) Ltd.

	NAME	SIGNATURE	DATE
DRAWN BY:	AR		15/10/15
CHECKED:	L. PADAYACHEE		15/10/15
DESIGNER:	R.van SCHALKWYK		15/10/15
PR ENG:	D. du TOIT		15/10/10
PROJECT ENG MANAGER:	L. PADAYACHEE		15/10/15
LOCAL PR ENG:			
CLIENT:			

CLIENT

MOZAMBIQUE GAS DEVELOPMENT PROJECT

Anadarko
Moçambique Área 1, Lda

PROJECT
AMA 1
RESETTLEMENT
VILLAGE

DRAWING DESCRIPTION
RESETTLEMENT VILLAGE
SITE SETTING OUT
LAYOUT

SCALE	DATE
1:2000 ORIGINAL DWG SIZE A1	DECEMBER 2015

DRAWING NUMBER	REV NO
C00290-00-TP-DAL-0001-001	0

ANADARKO DRAWING NUMBER
EZ-MZ-C1000-WOR-E04-00078-01

STAND NO.	FUTURE EXPANSION							
550	X = 663579.186	Y = 8801687.060	X = 663574.385	Y = 8801693.523	X = 663561.988	Y = 8801655.308	X = 663556.016	Y = 8801701.432
551	X = 663521.827	Y = 8801672.603	X = 663521.827	Y = 8801672.603	X = 663537.646	Y = 8801709.342	X = 663540.196	Y = 8801664.692
552	X = 663485.088	Y = 8801688.422	X = 663521.827	Y = 8801672.603	X = 663537.646	Y = 8801709.342	X = 663500.907	Y = 8801725.161
553	X = 663485.088	Y = 8801688.422	X = 663500.907	Y = 8801725.161	X = 663485.088	Y = 8801688.422	X = 663500.907	Y = 8801725.161
554	X = 663466.719	Y = 8801696.331	X = 663482.538	Y = 8801733.070	X = 663500.907	Y = 8801725.161	X = 663485.088	Y = 8801688.422
555	X = 663466.719	Y = 8801696.331	X = 663482.538	Y = 8801733.070	X = 663448.349	Y = 8801704.241	X = 663464.168	Y = 8801740.980
556	X = 663433.654	Y = 8801710.568	X = 663431.562	Y = 8801715.824	X = 663448.349	Y = 8801704.241	X = 663464.168	Y = 8801740.980
557	X = 663417.620	Y = 8801721.825	X = 663412.364	Y = 8801719.733	X = 663397.668	Y = 8801726.061	X = 663431.857	Y = 8801754.892
558	X = 663379.298	Y = 8801733.971	X = 663395.118	Y = 8801770.710	X = 663397.668	Y = 8801726.061	X = 663413.487	Y = 8801762.800
559	X = 663379.298	Y = 8801733.971	X = 663395.118	Y = 8801770.710	X = 663360.929	Y = 8801741.881	X = 663376.749	Y = 8801778.620
560	X = 663342.560	Y = 8801749.791	X = 663358.379	Y = 8801786.529	X = 663360.929	Y = 8801741.881	X = 663376.749	Y = 8801778.620
561	X = 663342.560	Y = 8801749.791	X = 663358.379	Y = 8801786.529	X = 663324.190	Y = 8801757.700	X = 663340.009	Y = 8801794.438
562	X = 663305.821	Y = 8801765.610	X = 663321.640	Y = 8801802.347	X = 663324.190	Y = 8801757.700	X = 663340.009	Y = 8801794.438
563	X = 663254.588	Y = 8801787.674	X = 663270.407	Y = 8801824.413	X = 663233.572	Y = 8801796.722	X = 663249.391	Y = 8801833.461
564	X = 663213.825	Y = 8801805.225	X = 663229.644	Y = 8801841.964	X = 663233.572	Y = 8801796.722	X = 663249.391	Y = 8801833.461
565	X = 663213.825	Y = 8801805.225	X = 663229.644	Y = 8801841.964	X = 663174.331	Y = 8801822.230	X = 663209.897	Y = 8801850.467
566	X = 663174.331	Y = 8801822.230	X = 663190.149	Y = 8801858.969	X = 663174.331	Y = 8801822.230	X = 663209.897	Y = 8801850.467
567	X = 663174.331	Y = 8801822.230	X = 663190.149	Y = 8801858.969	X = 663154.583	Y = 8801830.733	X = 663170.402	Y = 8801867.472
568	X = 663138.505	Y = 8801837.652	X = 663136.434	Y = 8801842.899	X = 663154.583	Y = 8801830.733	X = 663170.402	Y = 8801867.472
569	X = 663122.656	Y = 8801848.831	X = 663117.379	Y = 8801846.746	X = 663137.078	Y = 8801881.816	X = 663100.571	Y = 8801853.984
570	X = 663080.824	Y = 8801862.487	X = 663096.642	Y = 8801899.225	X = 663116.389	Y = 8801890.722	X = 663100.571	Y = 8801853.984
571	X = 663080.824	Y = 8801862.487	X = 663096.642	Y = 8801899.225	X = 663061.078	Y = 8801870.994	X = 663076.895	Y = 8801907.728
572	X = 663041.331	Y = 8801879.497	X = 663057.148	Y = 8801916.230	X = 663061.078	Y = 8801870.994	X = 663076.895	Y = 8801907.728
573	X = 663041.331	Y = 8801879.497	X = 663057.148	Y = 8801916.230	X = 663021.599	Y = 8801887.996	X = 663037.400	Y = 8801924.733
574	X = 663001.837	Y = 8801896.502	X = 663017.655	Y = 8801933.241	X = 663021.599	Y = 8801887.996	X = 663037.400	Y = 8801924.733
575	X = 663001.837	Y = 8801896.502	X = 663017.655	Y = 8801933.241	X = 662985.449	Y = 8801903.555	X = 662983.388	Y = 8801908.797
576	X = 662932.123	Y = 8801928.853	X = 662968.726	Y = 8801912.722	X = 662940.189	Y = 8801947.155	X = 662976.792	Y = 8801931.024
577	X = 662948.254	Y = 8801965.456	X = 662984.857	Y = 8801949.325	X = 662940.189	Y = 8801947.155	X = 662976.792	Y = 8801931.024
578	X = 662948.254	Y = 8801965.456	X = 662984.857	Y = 8801949.325	X = 662956.320	Y = 8801983.758	X = 662992.923	Y = 8801967.627
579	X = 663017.655	Y = 8801933.241	X = 662997.906	Y = 8801941.739	X = 663012.423	Y = 8801974.679	X = 663017.711	Y = 8801976.760
580	X = 663037.400	Y = 8801924.733	X = 663017.655	Y = 8801933.241	X = 663033.472	Y = 8801969.974	X = 663053.219	Y = 8801961.471
581	X = 663057.148	Y = 8801916.230	X = 663037.400	Y = 8801924.733	X = 663053.219	Y = 8801961.471	X = 663072.966	Y = 8801952.969
582	X = 663076.895	Y = 8801907.728	X = 663057.148	Y = 8801916.230	X = 663072.966	Y = 8801952.969	X = 663092.713	Y = 8801944.464
583	X = 663096.642	Y = 8801899.225	X = 663076.895	Y = 8801907.728	X = 663092.713	Y = 8801944.464	X = 663112.461	Y = 8801935.963
584	X = 663116.389	Y = 8801890.722	X = 663096.642	Y = 8801899.225	X = 663112.461	Y = 8801935.963	X = 663132.208	Y = 8801927.461
585	X = 663137.078	Y = 8801881.816	X = 663116.389	Y = 8801890.722	X = 663132.208	Y = 8801927.461	X = 663149.428	Y = 8801920.046
586	X = 663170.402	Y = 8801867.472	X = 663150.856	Y = 8801875.884	X = 663165.278	Y = 8801908.870	X = 663170.556	Y = 8801910.956
587	X = 663190.149	Y = 8801858.969	X = 663170.402	Y = 8801867.472	X = 663186.221	Y = 8801904.211	X = 663205.968	Y = 8801895.709
588	X = 663209.897	Y = 8801850.467	X = 663190.149	Y = 8801858.969	X = 663205.968	Y = 8801895.709	X = 663225.716	Y = 8801887.206
589	X = 663229.644	Y = 8801841.964	X = 663209.897	Y = 8801850.467	X = 663225.716	Y = 8801887.206	X = 663245.463	Y = 8801878.703
590	X = 663249.391	Y = 8801833.461	X = 663229.644	Y = 8801841.964	X = 663245.463	Y = 8801878.703	X = 663265.210	Y = 8801870.201
591	X = 663270.407	Y = 8801824.413	X = 663249.391	Y = 8801833.461	X = 663265.210	Y = 8801870.201	X = 663286.226	Y = 8801861.152
592	X = 663337.460	Y = 8801839.088	X = 663321.640	Y = 8801802.347	X = 663355.828	Y = 8801831.177	X = 663340.010	Y = 8801794.439
593	X = 663355.828	Y = 8801831.177	X = 663340.010	Y = 8801794.439	X = 663374.198	Y = 8801823.267	X = 663358.381	Y = 8801786.527
594	X = 663374.198	Y = 8801823.267	X = 663358.381	Y = 8801786.527	X = 663392.568	Y = 8801815.358	X = 663376.749	Y = 8801778.620
595	X = 663392.568	Y = 8801815.358	X = 663376.749	Y = 8801778.620	X = 663410.937	Y = 8801807.448	X = 663395.118	Y = 8801770.710
596	X = 663410.937	Y = 8801807.448	X = 663395.118	Y = 8801770.710	X = 663429.307	Y = 8801799.539	X = 663413.487	Y = 8801762.80
597	X = 663429.307	Y = 8801799.539	X = 663413.487	Y = 8801762.80	X = 663443.973	Y = 8801793.224	X = 663446.094	Y = 8801787.956
598	X = 663465.291	Y = 8801784.046	X = 663460.036	Y = 8801781.954	X = 663445.799	Y = 8801748.889	X = 663479.987	Y = 8801777.719
599	X = 663479.987	Y = 8801777.719	X = 663464.168	Y = 8801740.980	X = 663498.357	Y = 8801769.809	X = 663482.538	Y = 8801733.070
600	X = 663498.357	Y = 8801769.809	X = 663482.538	Y = 8801733.070	X = 663516.726	Y = 8801761.900	X = 663500.907	Y = 8801725.161
601	X = 663516.726	Y = 8801761.900	X = 663500.907	Y = 8801725.161	X = 663535.096	Y = 8801753.99	X = 663519.277	Y = 8801717.251
602	X = 663535.096	Y = 8801753.99	X = 663519.277	Y = 8801717.251	X = 663553.465	Y = 8801746.081	X = 663537.646	Y = 8801709.342
603	X = 663553.465	Y = 8801746.081	X = 663537.646	Y = 8801709.342	X = 663561.167	Y = 8801742.765	X = 663567.002	Y = 8801735.897
604	X = 663629.730	Y = 8801711.689	X = 663590.913	Y = 8801702.032	X = 663634.563	Y = 8801692.262	X = 663595.741	Y = 8801682.624
605	X = 663624.883	Y = 8801731.093	X = 663586.084	Y = 8801721.441	X = 663629.730	Y = 8801711.689	X = 663590.913	Y = 8801702.032
606	X = 663620.045	Y = 8801750.499	X = 663581.165	Y = 8801740.806	X = 663624.883	Y = 8801731.093	X = 663586.084	Y = 8801721.441
607	X = 663610.320	Y = 8801789.299	X = 663571.557	Y = 8801779.636	X = 663615.144	Y = 8801769.889	X = 663576.395	Y = 8801760.230
608	X = 663605.296	Y = 8801808.65	X = 663566.719	Y = 8801799.042	X = 663610.320	Y = 8801789.299	X = 663571.557	Y = 8801779.636
609	X = 663538.234	Y = 8801812.300	X = 663522.330	Y = 8801775.815	X = 663549.161	Y = 8801807.465	X = 663558.295	Y = 8801770.822
610	X = 663520.028	Y = 8801820.357	X = 663504.209	Y = 8801783.618	X = 663538.234	Y = 8801812.300	X = 663522.330	Y = 8801775.815
611	X = 663501.658	Y = 8801828.266	X = 663485.839	Y = 8801791.527	X = 663520.028	Y = 8801820.357	X = 663504.209	Y = 8801783.618
612	X = 663483.296	Y = 8801836.192	X = 663469.052	Y = 8801803.111	X = 663471.144	Y = 8801797.855		
613	X = 663451.058	Y = 8801850.055	X = 663435.239	Y = 8801813.317	X = 663469.428	Y = 8801842.146	X = 663455.257	Y = 8801809.053
614	X = 663432.689	Y = 8801857.965	X = 663416.870	Y = 8801821.225	X = 663451.058	Y = 8801850.055	X = 663435.239	Y = 8801813.317
615	X = 663414.319	Y = 8801865.875	X = 663398.500	Y = 8801829.136	X = 663432.689	Y = 8801857.965	X = 663416.870	Y = 8801821.225
616	X = 663395.948	Y = 8801873.784	X = 663380.130	Y = 8801837.045	X = 663414.319	Y = 8801865.875	X = 663398.500	Y = 8801829.136
617	X = 663377.580	Y = 8801881.693	X = 663361.761	Y = 8801844.955	X = 663395.948	Y = 8801873.784	X = 663380.130	Y = 8801837.045
618	X = 663359.211	Y = 8801889.604	X = 663343.392	Y = 8801852.865	X = 663377.580	Y = 8801881.693	X = 663361.761	Y = 8801844.955
619	X = 663287.448	Y = 8801920.506	X = 663271.629	Y = 8801883.767	X = 663308.464	Y = 8801911.457	X = 663292.645	Y = 8801874.718
620	X = 663267.701	Y = 8801929.008	X = 663251.882	Y = 8801892.269	X = 663287.448	Y = 8801920.506	X = 663271.629	Y = 8801883.767
621	X = 663247.954	Y = 8801937.511	X = 663232.135	Y = 8801900.772	X = 663267.701	Y = 8801929.008	X = 663251.882	Y = 8801892.269
622	X = 663228.206	Y = 8801946.014	X = 663212.387	Y = 8801909.275	X = 663247.954	Y = 8801937.511	X = 663232.135	Y = 8801900.772
623	X = 663208.459	Y = 8801954.516	X = 663192.640	Y = 8801917.777	X = 663228.206	Y = 8801946.014	X = 663212.387	Y = 8801909.275
624	X = 663188.916	Y = 8801962.931	X = 663174.493	Y = 8801929.944	X = 663176.564	Y = 8801924.697	X = 663208.459	Y = 8801954.516

STAND NO.	FUTURE EXPANSION							
625	X = 663154.701	Y = 8801977.654	X = 663138.883	Y = 8801940.916	X = 663175.138	Y = 8801968.861	X = 663160.715	Y = 8801935.876
626	X = 663134.285	Y = 8801986.927	X = 663119.135	Y = 8801949.419	X = 663154.701	Y = 8801977.654	X = 663138.883	Y = 8801940.916
627	X = 663115.207	Y = 8801994.661	X = 663099.390	Y = 8801957.926	X = 663134.285	Y = 8801986.927	X = 663119.135	Y = 8801949.419
628	X = 663095.460	Y = 8802003.163	X = 663079.640	Y = 8801966.423	X = 663115.207	Y = 8801994.661	X = 663099.390	Y = 8801957.926
629	X = 663075.712	Y = 8802011.665	X = 663059.895	Y = 8801974.931	X = 663095.460	Y = 8802003.163	X = 663079.640	Y = 8801966.423
630	X = 663055.965	Y = 8802020.169	X = 663040.146	Y = 8801983.430	X = 663075.712	Y = 8802011.665	X = 663059.895	Y = 8801974.931
631	X = 663036.218	Y = 8802028.671	X = 663021.701	Y = 8801995.732	X = 663023.762	Y = 8801990.489	X = 663055.965	Y = 8802020.169
632	X = 662956.320	Y = 8801983.758	X = 662992.923	Y = 8801967.627	X = 662964.386	Y = 8802002.059	X = 663000.989	Y = 8801985.928
633	X = 662964.386	Y = 8802002.059	X = 663000.989	Y = 8801985.928	X = 662972.451	Y = 8802020.361	X = 663009.054	Y = 8802004.230
634	X = 662972.451	Y = 8802020.361	X = 663009.054	Y = 8802004.230	X = 662980.517	Y = 8802038.662	X = 663017.120	Y = 8802022.531
635	X = 662980.517	Y = 8802038.662	X = 663017.120	Y = 8802022.531	X = 662988.582	Y = 8802056.964	X = 663025.186	Y = 8802040.833
636	X = 662988.582	Y = 8802056.964	X = 663025.186	Y = 8802040.833	X = 662996.648	Y = 8802075.265	X = 663033.250	Y = 8802059.133
637	X = 662996.648	Y = 8802075.265	X = 663033.250	Y = 8802059.133	X = 663004.714	Y = 8802093.567	X = 663041.317	Y = 8802077.436
638	X = 663056.023	Y = 8802063.692	X = 663050.734	Y = 8802061.611	X = 663036.218	Y = 8802028.671	X = 663071.783	Y = 8802056.906
639	X = 663071.783	Y = 8802056.906	X = 663055.965	Y = 8802020.169	X = 663111.278	Y = 8802039.900	X = 663095.460	Y = 8802003.163
641	X = 663111.278	Y = 8802039.900	X = 663095.460	Y = 8802003.163	X = 663131.025	Y = 8802031.398	X = 663115.207	Y = 8801994.661
642	X = 663131.025	Y = 8802031.398	X = 663115.207	Y = 8801994.661	X = 663150.773	Y = 8802022.897	X = 663134.954	Y = 8801986.158
643	X = 663150.773	Y = 8802022.897	X = 663134.954	Y = 8801986.158	X = 663170.522	Y = 8802014.398	X = 663154.701	Y = 8801977.655
644	X = 663170.522	Y = 8802014.398	X = 663154.701	Y = 8801977.655	X = 663187.488	Y = 8802007.094	X = 663189.560	Y = 8802001.847
645	X = 663208.614	Y = 8801997.998	X = 663203.337	Y = 8801995.914	X = 663188.916	Y = 8801962.931	X = 663224.277	Y = 8801991.254
646	X = 663224.277	Y = 8801991.254	X = 663208.459	Y = 8801954.516	X = 663244.024	Y = 8801982.751	X = 663228.206	Y = 8801946.014
647	X = 663244.024	Y = 8801982.751	X = 663228.206	Y = 8801946.014	X = 663263.772	Y = 8801974.250	X = 663247.954	Y = 8801937.511
648	X = 663263.772	Y = 8801974.250	X = 663247.954	Y = 8801937.511	X = 663283.519	Y = 8801965.747	X = 663267.701	Y = 8801929.008
649	X = 663283.519	Y = 8801965.747	X = 663267.701	Y = 8801929.008	X = 663303.267	Y = 8801957.244	X = 663287.448	Y = 8801920.506
650	X = 663303.267	Y = 8801957.244	X = 663287.448	Y = 8801920.506	X = 663324.282	Y = 8801948.196	X = 663308.464	Y = 8801911.457
651	X = 663375.030	Y = 8801926.341	X = 663359.210	Y = 8801889.602	X = 663393.399	Y = 8801918.432	X = 663377.580	Y = 8801881.693
652	X = 663393.399	Y = 8801918.432	X = 663377.580	Y = 8801881.693	X = 663411.769	Y = 8801910.522	X = 663395.948	Y = 8801873.784
653	X = 663411.769	Y = 8801910.522	X = 663395.948	Y = 8801873.784	X = 663430.138	Y = 8801902.613	X = 663414.319	Y = 8801865.875
654	X = 663430.138	Y = 8801902.613	X = 663414.319	Y = 8801865.875	X = 663448.508	Y = 8801894.704	X = 663432.769	Y = 8801858.153
655	X = 663448.508	Y = 8801894.704	X = 663432.769	Y = 8801858.153	X = 663466.878	Y = 8801886.794	X = 663451.058	Y = 8801850.055
656	X = 663466.878	Y = 8801886.794	X = 663451.058	Y = 8801850.055	X = 663481.725	Y = 8801880.401	X = 663483.812	Y = 8801875.147
657	X = 663502.782	Y = 8801871.333	X = 663497.526	Y = 8801869.241	X = 663483.296	Y = 8801836.192	X = 663517.478	Y = 8801865.005
658	X = 663517.478	Y = 8801865.005	X = 663501.662	Y = 8801828.274	X = 663535.847	Y = 8801857.096	X = 663520.028	Y = 8801820.357
659	X = 663600.694	Y = 8801828.123	X = 663561.882	Y = 8801818.448	X = 663605.532	Y = 8801808.717	X = 663566.719	Y = 8801799.042
660	X = 663595.856	Y = 8801847.529	X = 663557.044	Y = 8801837.854	X = 663600.694	Y = 8801828.123	X = 663561.882	Y = 8801818.448
661	X = 663591.018	Y = 8801866.935	X = 663552.208	Y = 8801857.261	X = 663595.856	Y = 8801847.529	X = 663557.044	Y = 8801837.854
662	X = 663565.477	Y = 8801904.223	X = 663549.656	Y = 8801867.481	X = 663583.184	Y = 8801896.599	X = 663591.018	Y = 8801866.935
663	X = 663547.107	Y = 8801912.132	X = 663531.291	Y = 8801875.401	X = 663565.477	Y = 8801904.223	X = 663549.656	Y = 8801867.481
664	X = 663528.737	Y = 8801920.041	X = 663512.921	Y = 8801883.309	X = 663547.107	Y = 8801912.132	X = 663531.291	Y = 8801875.401
665	X = 663510.367	Y = 8801927.951	X = 663494.552	Y = 8801891.220	X = 663528.737	Y = 8801920.041	X = 663512.921	Y = 8801883.309
666	X = 663491.998	Y = 8801935.860	X = 663476.182	Y = 8801899.128	X = 663510.367	Y = 8801927.951	X = 663494.552	Y = 8801891.220
667	X = 663473.628	Y = 8801943.769	X = 663457.813	Y = 8801907.038	X = 663491.998	Y = 8801935.860	X = 663476.182	Y = 8801899.128
668	X = 663455.261	Y = 8801951.684	X = 663439.443	Y = 8801914.946	X = 663473.628	Y = 8801943.769	X = 663457.813	Y = 8801907.038
669	X = 663436.892	Y = 8801959.595	X = 663421.073	Y = 8801922.856	X = 663455.261	Y = 8801951.684	X = 663439.443	Y = 8801914.946
670	X = 663418.520	Y = 8801967.499	X = 663402.703	Y = 8801930.764	X = 663436.892	Y = 8801959.595	X = 663421.073	Y = 8801922.856
671	X = 663400.152	Y = 8801975.412	X = 663384.333	Y = 8801938.673	X = 663418.520	Y = 8801967.499	X = 663402.703	Y = 8801930.764
672	X = 663381.783	Y = 8801983.322	X = 663365.963	Y = 8801946.581	X = 663400.152	Y = 8801975.412	X = 663384.333	Y = 8801938.673
673	X = 663363.433	Y = 8801991.214	X = 663347.598	Y = 8801954.500	X = 663381.783	Y = 8801983.322	X = 663365.963	Y = 8801946.581
674	X = 663320.368	Y = 8802009.776	X = 663304.550	Y = 8801973.037	X = 663338.738	Y = 8802001.867	X = 663322.920	Y = 8801965.128
675	X = 663301.991	Y = 8802017.667	X = 663286.181	Y = 8801980.945	X = 663320.368	Y = 8802009.776	X = 663304.550	Y = 8801973.037
676	X = 663283.621	Y = 8802025.576	X = 663267.811	Y = 8801988.854	X = 663301.991	Y = 8802017.667	X = 663286.181	Y = 8801980.945
677	X = 663265.251	Y = 8802033.485	X = 663249.441	Y = 8801996.763	X = 663283.621	Y = 8802025.576	X = 663267.811	Y = 8801988.854
678	X = 663246.889	Y = 8802041.412	X = 663231.071	Y = 8802004.672	X = 663265.251	Y = 8802033.485	X = 663249.441	Y = 8801996.763
679	X = 663228.512	Y = 8802049.303	X = 663212.701	Y = 8802012.581	X = 663246.889	Y = 8802041.412	X = 663231.071	Y = 8802004.672
680	X = 663210.149	Y = 8802057.229	X = 663194.332	Y = 8802020.490	X = 663228.512	Y = 8802049.303	X = 663212.701	Y = 8802012.581
681	X = 663191.772	Y = 8802065.122	X = 663175.962	Y = 8802028.398	X = 663210.149	Y = 8802057.229	X = 663194.332	Y = 8802020.490
682	X = 663173.410	Y = 8802073.047	X = 663157.592	Y = 8802036.307	X = 663191.772	Y = 8802065.122	X = 663175.962	Y = 8802028.398
683	X = 663155.040	Y = 8802080.956	X = 663139.222	Y = 8802044.216	X = 663173.410	Y = 8802073.047	X = 663157.592	Y = 8802036.307
684	X = 663136.663	Y = 8802088.849	X = 663120.852	Y = 8802052.125	X = 663155.040	Y = 8802080.956	X = 663139.222	Y = 8802044.216
685	X = 663118.300	Y = 8802096.773	X = 663102.482	Y = 8802060.034	X = 663136.663	Y = 8802088.849	X = 663120.852	Y = 8802052.125
686	X = 663099.930	Y = 8802104.682	X = 663084.113	Y = 8802067.943	X = 663118.300	Y = 8802096.773	X = 663102.482	Y = 8802060.034
687	X = 663081.560	Y = 8802112.591	X = 663065.743	Y = 8802075.852	X = 663099.930	Y = 8802104.682	X = 663084.113	Y = 8802067.943
688	X = 663063.191	Y = 8802120.500	X = 663047.373	Y = 8802083.760	X = 663081.560	Y = 8802112.591	X = 663065.743	Y = 8802075.852

NOTES

REFERENCE DRAWINGS:
SITE SETTING OUT LAYOUT
C00290-00-TP-DAL-0001-001

SITE SETTING OUT CO ORDINATE
C00290-00-TP-DAL-0013-001
C00290-00-TP-DAL-0013-002
C00290-00-TP-DAL-0013-003
C00290-00-TP-DAL-0013-004

ISSUED FOR CONSTRUCTION

WorleyParsons RSA retains the copyright in all intellectual property, including designs and/or documents prepared in terms of this appointment for the project covered by the appointment. The client may use the designs and/or documents for the sole purpose of their intended use on this project only subject to payment for the design having been received. Use for any other purpose, whether or not the design and/or documents have been paid for constitutes an infringement of copyright, and all rights are reserved.

All dimensions must be verified on site before the works commence. Refer any discrepancies to the Engineer.

Copyright reserved

REVISIONS

NO.	DATE	CHECKED	DONE BY	DESCRIPTION
A	16/10/15		RJ	ISSUED FOR INTERNAL REVIEW
B	17/10/15		AR	ISSUED FOR DETAIL DESIGN
C	18/10/15		AR	ISSUED FOR SQUAD CHECK
D	23/10/15		AR	ISSUED FOR CLIENT REVIEW
E	25/11/15		CT	ISSUED FOR CLIENT APPROVAL
0	07/12/20 15		CT	ISSUED FOR CONSTRUCTION

WorleyParsons
resources & energy

39 MELROSE BOULEVARD, MELROSE ARCH, JOHANNESBURG
P.O. Box 61232, MARSHALLTOWN, 2107
TEL: +27 (0)11 218 3000
FAX: +27(0)11 218 3100
www.worleyparsons.com
WorleyParsons RSA (Pty) Ltd.

	NAME	SIGNATURE	DATE
DRAWN BY:	R J		15/10/2015
CHECKED:	L. PADAYACHEE		15/10/15
DESIGNER:	R.van SCHALKWYK		15/10/15
PR ENG:	D. du TOIT.		15/10/15
PROJECT ENG MANAGER:	L. PADAYACHEE		15/10/15
LOCAL PR ENG:			
CLIENT:			

CLIENT

MOZAMBIQUE GAS DEVELOPMENT PROJECT

Anadarko
Moçambique Área 1, Lda

PROJECT
AMA 1
RESETTLEMENT
VILLAGE

DRAWING DESCRIPTION
RESETTLEMENT VILLAGE
SITE SETTING OUT
CO-ORDINATE LIST

SHEET 5 OF 5

SCALE	DATE
ORIGINAL DWG SIZE A1	DECEMBER 2015

DRAWING NUMBER	REV NO
C00290-00-TP-DAL-0013-005	0

ANADARKO DRAWING NUMBER
EA-MZ-CI0000-WOR-E04-00059-05

STAND NO:												
447	X = 663322.537	Y = 8801551.547	X = 663338.357	Y = 8801588.286	X = 663304.167	Y = 8801559.457	X = 663319.986	Y = 8801596.196				
448	X = 663285.798	Y = 8801567.367	X = 663301.617	Y = 8801604.106	X = 663304.167	Y = 8801559.457	X = 663319.986	Y = 8801596.196				
449	X = 663285.798	Y = 8801567.367	X = 663301.617	Y = 8801604.106	X = 663267.430	Y = 8801575.280	X = 663283.247	Y = 8801612.015				
450	X = 663249.059	Y = 8801583.186	X = 663264.878	Y = 8801619.925	X = 663267.430	Y = 8801575.280	X = 663283.247	Y = 8801612.015				
451	X = 663249.059	Y = 8801583.186	X = 663264.878	Y = 8801619.925	X = 663230.689	Y = 8801591.096	X = 663246.508	Y = 8801627.835				
452	X = 663178.482	Y = 8801613.583	X = 663157.466	Y = 8801622.632	X = 663173.285	Y = 8801659.371	X = 663194.300	Y = 8801650.322				
453	X = 663137.719	Y = 8801631.134	X = 663157.466	Y = 8801622.632	X = 663173.285	Y = 8801659.371	X = 663153.538	Y = 8801667.874				
454	X = 663137.719	Y = 8801631.134	X = 663153.538	Y = 8801667.874	X = 663117.971	Y = 8801639.637	X = 663133.790	Y = 8801676.376				
455	X = 663098.224	Y = 8801648.140	X = 663114.043	Y = 8801684.879	X = 663117.971	Y = 8801639.637	X = 663133.790	Y = 8801676.376				
456	X = 663098.224	Y = 8801648.140	X = 663114.043	Y = 8801684.879	X = 663078.477	Y = 8801656.642	X = 663094.296	Y = 8801693.382				
457	X = 663062.404	Y = 8801663.563	X = 663060.312	Y = 8801668.819	X = 663078.477	Y = 8801656.642	X = 663094.296	Y = 8801693.382	X = 663074.741	Y = 8801701.801		
458	X = 663046.614	Y = 8801674.692	X = 663041.367	Y = 8801672.620	X = 663060.860	Y = 8801707.777	X = 663023.948	Y = 8801680.120	X = 663039.767	Y = 8801716.860		
459	X = 663004.201	Y = 8801688.623	X = 663020.020	Y = 8801725.362	X = 663039.767	Y = 8801716.860	X = 663023.948	Y = 8801680.120				
460	X = 663004.201	Y = 8801688.623	X = 663020.020	Y = 8801725.362	X = 662984.454	Y = 8801697.126	X = 663000.273	Y = 8801733.865				
461	X = 662964.705	Y = 8801705.625	X = 662980.525	Y = 8801742.367	X = 662984.454	Y = 8801697.126	X = 663000.273	Y = 8801733.865				
462	X = 662964.705	Y = 8801705.625	X = 662980.525	Y = 8801742.367	X = 662944.959	Y = 8801714.131	X = 662960.778	Y = 8801750.870				
463	X = 662925.210	Y = 8801722.628	X = 662941.030	Y = 8801759.372	X = 662944.959	Y = 8801714.131	X = 662960.778	Y = 8801750.870				
464	X = 662925.210	Y = 8801722.628	X = 662941.030	Y = 8801759.372	X = 662908.823	Y = 8801729.683	X = 662906.766	Y = 8801734.934	X = 662921.283	Y = 8801767.875		
465	X = 662857.078	Y = 8801765.301	X = 662889.120	Y = 8801741.362	X = 662867.598	Y = 8801782.441	X = 662904.207	Y = 8801766.307				
466	X = 662875.664	Y = 8801800.743	X = 662912.267	Y = 8801784.611	X = 662867.598	Y = 8801782.441	X = 662904.207	Y = 8801766.307				
467	X = 662875.664	Y = 8801800.743	X = 662912.267	Y = 8801784.611	X = 662883.730	Y = 8801819.044	X = 662920.333	Y = 8801802.913				
468	X = 662891.795	Y = 8801837.346	X = 662928.398	Y = 8801821.214	X = 662883.730	Y = 8801819.044	X = 662920.333	Y = 8801802.913				
469	X = 662941.030	Y = 8801759.372	X = 662921.283	Y = 8801767.875	X = 662935.801	Y = 8801800.816	X = 662941.089	Y = 8801802.897	X = 662956.849	Y = 8801796.111		
470	X = 662960.778	Y = 8801750.870	X = 662941.030	Y = 8801759.372	X = 662956.849	Y = 8801796.111	X = 662976.596	Y = 8801787.608				
471	X = 662980.525	Y = 8801742.367	X = 662960.778	Y = 8801750.870	X = 662976.596	Y = 8801787.608	X = 662996.344	Y = 8801779.105				
472	X = 663000.273	Y = 8801733.865	X = 662980.525	Y = 8801742.367	X = 662996.344	Y = 8801779.105	X = 663016.091	Y = 8801770.602				
473	X = 663020.020	Y = 8801725.362	X = 663000.273	Y = 8801733.865	X = 663016.091	Y = 8801770.602	X = 663035.838	Y = 8801762.100				
474	X = 663039.767	Y = 8801716.860	X = 663020.020	Y = 8801725.362	X = 663035.838	Y = 8801762.100	X = 663055.586	Y = 8801753.598				
475	X = 663060.860	Y = 8801707.777	X = 663039.767	Y = 8801716.860	X = 663055.586	Y = 8801753.598	X = 663073.005	Y = 8801746.097	X = 663075.097	Y = 8801740.842		
476	X = 663094.296	Y = 8801693.382	X = 663074.741	Y = 8801701.801	X = 663089.160	Y = 8801734.780	X = 663094.437	Y = 8801736.863	X = 663110.115	Y = 8801730.121		
477	X = 663114.043	Y = 8801684.879	X = 663094.296	Y = 8801693.382	X = 663110.115	Y = 8801730.121	X = 663129.862	Y = 8801721.618				
478	X = 663133.790	Y = 8801676.376	X = 663114.043	Y = 8801684.879	X = 663129.862	Y = 8801721.618	X = 663149.609	Y = 8801713.115				
479	X = 663153.538	Y = 8801667.874	X = 663133.790	Y = 8801676.376	X = 663149.609	Y = 8801713.115	X = 663169.357	Y = 8801704.613				
480	X = 663173.285	Y = 8801659.371	X = 663153.538	Y = 8801667.874	X = 663169.357	Y = 8801704.613	X = 663189.104	Y = 8801696.110				
481	X = 663173.285	Y = 8801659.371	X = 663194.300	Y = 8801650.322	X = 663189.104	Y = 8801696.110	X = 663210.119	Y = 8801687.061				
482	X = 663264.878	Y = 8801619.925	X = 663246.508	Y = 8801627.835	X = 663262.338	Y = 8801664.569	X = 663280.697	Y = 8801656.664				
483	X = 663283.247	Y = 8801612.015	X = 663264.878	Y = 8801619.925	X = 663280.697	Y = 8801656.664	X = 663299.067	Y = 8801648.754				
484	X = 663301.617	Y = 8801604.106	X = 663283.247	Y = 8801612.015	X = 663299.067	Y = 8801648.754	X = 663317.436	Y = 8801640.844				
485	X = 663319.986	Y = 8801596.196	X = 663301.617	Y = 8801604.106	X = 663317.436	Y = 8801640.844	X = 663335.806	Y = 8801632.935				
486	X = 663338.357	Y = 8801588.286	X = 663319.986	Y = 8801596.196	X = 663335.806	Y = 8801632.935	X = 663354.175	Y = 8801625.025				
487	X = 663356.725	Y = 8801580.377	X = 663338.357	Y = 8801588.286	X = 663354.175	Y = 8801625.025	X = 663372.545	Y = 8801617.115				
488	X = 663375.095	Y = 8801572.467	X = 663356.725	Y = 8801580.377	X = 663372.545	Y = 8801617.115	X = 663390.914	Y = 8801609.206				
489	X = 663375.095	Y = 8801572.467	X = 663390.914	Y = 8801609.206	X = 663409.284	Y = 8801601.296	X = 663393.461	Y = 8801564.559				
490	X = 663467.697	Y = 8801584.626	X = 663481.160	Y = 8801556.514	X = 663491.711	Y = 8801552.886	X = 663486.622	Y = 8801593.694	X = 663503.474	Y = 8801558.523		
491	X = 663505.552	Y = 8801602.764	X = 663522.405	Y = 8801567.593	X = 663503.474	Y = 8801558.523	X = 663486.622	Y = 8801593.694				
492	X = 663505.552	Y = 8801602.764	X = 663522.405	Y = 8801567.593	X = 663524.482	Y = 8801611.835	X = 663541.335	Y = 8801576.664				
493	X = 663543.413	Y = 8801620.905	X = 663560.265	Y = 8801585.735	X = 663524.482	Y = 8801611.835	X = 663541.335	Y = 8801576.664				
494	X = 663543.413	Y = 8801620.905	X = 663560.265	Y = 8801585.735	X = 663562.343	Y = 8801629.976	X = 663579.195	Y = 8801594.805				
495	X = 663581.273	Y = 8801639.047	X = 663598.126	Y = 8801603.876	X = 663562.343	Y = 8801629.976	X = 663579.195	Y = 8801594.805				
496	X = 663581.273	Y = 8801639.047	X = 663598.126	Y = 8801603.876	X = 663618.803	Y = 8801613.777	X = 663601.446	Y = 8801644.277	X = 663595.860	Y = 8801646.005		
497	X = 663636.638	Y = 8801611.090	X = 663671.376	Y = 8801630.921	X = 663661.460	Y = 8801648.290	X = 663626.722	Y = 8801628.459				
498	X = 663616.806	Y = 8801645.828	X = 663651.535	Y = 8801665.654	X = 663661.460	Y = 8801648.290	X = 663626.722	Y = 8801628.459				
499	X = 663452.384	Y = 8801599.071	X = 663468.203	Y = 8801635.810	X = 663429.539	Y = 8801608.907	X = 663445.358	Y = 8801645.646				
500	X = 663411.170	Y = 8801616.816	X = 663426.988	Y = 8801653.556	X = 663429.539	Y = 8801608.907	X = 663445.358	Y = 8801645.646				
501	X = 663411.170	Y = 8801616.816	X = 663426.988	Y = 8801653.556	X = 663408.277	Y = 8801661.612	X = 663394.040	Y = 8801628.547	X = 663396.132	Y = 8801623.291		
502	X = 663380.291	Y = 8801634.465	X = 663374.640	Y = 8801632.542	X = 663394.569	Y = 8801667.514	X = 663359.819	Y = 8801638.928	X = 663375.764	Y = 8801675.611		
503	X = 663341.477	Y = 8801646.823	X = 663357.296	Y = 8801683.563	X = 663375.764	Y = 8801675.611	X = 663359.819	Y = 8801638.928				
504	X = 663341.477	Y = 8801646.823	X = 663357.296	Y = 8801683.563	X = 663323.108	Y = 8801654.734	X = 663338.928	Y = 8801691.472				
505	X = 663338.928	Y = 8801691.472	X = 663320.557	Y = 8801699.383	X = 663323.108	Y = 8801654.734	X = 663338.928	Y = 8801691.472				
506	X = 663338.928	Y = 8801691.472	X = 663320.557	Y = 8801699.383	X = 663286.369	Y = 8801670.553	X = 663302.189	Y = 8801707.292				
507	X = 663267.968	Y = 8801678.477	X = 663283.819	Y = 8801715.202	X = 663286.369	Y = 8801670.553	X = 663302.189	Y = 8801707.292				
508	X = 663216.531	Y = 8801700.630	X = 663232.350	Y = 8801737.369	X = 663195.516	Y = 8801709.678	X = 663211.335	Y = 8801746.417				
509	X = 663175.768	Y = 8801718.181	X = 663191.587	Y = 8801754.920	X = 663195.516	Y = 8801709.678	X = 663211.335	Y = 8801746.417				
510	X = 663175.768	Y = 8801718.181	X = 663191.587	Y = 8801754.920	X = 663156.021	Y = 8801726.684	X = 663171.840	Y = 8801763.423				
511	X = 663136.274	Y = 8801735.186	X = 663152.093	Y = 8801771.925	X = 663156.021	Y = 8801726.684	X = 663171.840	Y = 8801763.423				
512	X = 663136.274	Y = 8801735.186	X = 663152.093	Y = 8801771.925	X = 663116.527	Y = 8801743.689	X = 663132.345	Y = 8801780.428				
513	X = 663100.453	Y = 8801750.610	X = 663098.375	Y = 8801755.854	X = 663116.527	Y = 8801743.689	X = 663132.345	Y = 8801780.428	X = 663112.797	Y = 8801788.839		
514	X = 663084.597	Y = 8801761.786	X = 663079.321	Y = 8801759.703	X = 663099.021	Y = 8801794.775	X = 663061.918	Y = 8801767.202	X = 663077.737	Y = 8801803.941		
515	X = 663061.918	Y = 8801767.202	X = 663077.737	Y = 8801803.941	X = 663042.170	Y = 8801775.705	X = 663057.989	Y = 8801812.444				
516	X = 663022.423	Y = 8801784.208	X = 663038.242	Y = 8801820.946	X = 663042.170	Y = 8801775.705	X = 663057.989	Y = 8801812.444				
517	X = 663022.423	Y = 8801784.208	X = 663038.242	Y = 8801820.946	X = 663002.676	Y = 8801792.710	X = 663018.495	Y = 8801829.449				
518	X = 662982.929	Y = 8801801.213	X = 662998.747	Y = 8801837.952	X = 663002.676	Y = 8801792.710	X = 663018.495	Y = 8801829.449				
519	X = 662982.929	Y = 8801801.213	X = 662998.747	Y = 8801837.952	X = 662963.181	Y = 8801809.715	X = 662979.000	Y = 8801846.454				
520	X = 662947.136	Y = 8801816.618	X = 662945.077	Y = 8801821.865	X = 662963.181	Y = 8801809.715	X = 662979.000	Y = 8801846.454	X = 662959.596	Y = 8801854.810		
521	X = 662928.398	Y = 8801821.214	X = 662891.795	Y = 8801837.346	X = 662899.861	Y = 8801855.647	X = 662936.464	Y = 8801839.516				
522	X = 662907.926	Y = 8801873.949	X = 662944.529	Y = 8801857.817	X = 662899.861	Y = 8801855.647	X = 662936.464	Y = 8801839.516				
523	X = 662907.926	Y = 8801873.949	X = 662944.529	Y = 8801857.817	X = 662915.992	Y = 8801892.250	X = 662952.595	Y = 8801876.119				

STAND NO:												
524	X = 662924.058	Y = 8801910.552	X = 662960.661	Y = 8801894.420	X = 662915.992	Y = 8801892.250	X = 662952.595	Y = 8801876.119				
525	X = 662924.058	Y = 8801910.552	X = 662960.661	Y = 8801894.420	X = 662932.123	Y = 8801928.853	X = 662968.726	Y = 8801912.722				
526	X = 662979.000	Y = 8801846.454	X = 662959.596	Y = 8801854.810	X = 662974.112	Y = 8801887.747	X = 662979.399	Y = 8801889.825	X = 662994.819	Y = 8801883.193		
527	X = 662998.747	Y = 8801837.952	X = 662979.000	Y = 8801846.454	X = 662994.819	Y = 8801883.193	X = 663014.566	Y = 8801874.691				
528	X = 663018.495	Y = 8801829.449	X = 662998.747	Y = 8801837.952	X = 663014.566	Y = 8801874.691	X = 663034.314	Y = 8801866.188				
529	X = 663038.242	Y = 8801820.946	X = 663018.495	Y = 8801829.449	X = 663034.314	Y = 8801866.188	X = 663054.061	Y = 8801857.686				
530	X = 663057.989	Y = 8801812.444	X = 663038.242	Y = 8801820.946	X = 663054.061	Y = 8801857.686	X = 663073.808	Y = 8801849.183				
531	X = 663077.737	Y = 8801803.941	X = 663057.989	Y = 8801812.444	X = 663073.808	Y = 8801849.183	X = 663093.553	Y = 8801840.675				
532	X = 663099.021	Y = 8801794.775	X = 663077.737	Y = 8801803.941	X = 663093.553	Y = 8801840.675	X = 663111.370	Y = 8801833.004	X = 663113.442	Y = 8801827.757		
533	X = 663132.345	Y = 8801780.428	X = 663112.797	Y = 8801788.839	X = 663127.219	Y = 8801821.825	X = 663132.498	Y = 8801823.913	X = 663148.164	Y = 8801817.167		
534	X = 663152.093	Y = 8801771.925	X = 663132.345	Y = 8801780.428	X = 663148.164	Y = 8801817.167	X = 663167.912	Y = 8801808.664				
535	X = 663171.840	Y = 8801763.423	X = 663152.093	Y = 8801771.925	X = 663167.912	Y = 8801808.664	X = 663187.659	Y = 8801800.162				
536	X = 663191.587	Y = 8801754.920	X = 663171.840	Y = 8801763.423	X = 663187.659	Y = 8801800.162	X = 663207.407	Y = 8801791.660				
537	X = 663211.335	Y = 8801746.417	X = 663191.587	Y = 8801754.920	X = 663207.407	Y = 8801791.660	X = 663227.153	Y = 8801783.156				
538	X = 663232.350	Y = 8801737.369	X = 663211.335	Y = 8801746.417	X = 663227.153	Y = 8801783.156	X = 663248.169	Y = 8801774.108				
539	X = 663302.189	Y = 8801707.292	X = 663283.819	Y = 8801715.202	X = 663299.638	Y = 8801751.941	X = 663318.007	Y = 8801744.031				
540	X = 663320.557	Y = 8801699.383	X = 663302.189	Y = 8801707.292	X = 663318.007	Y = 8801744.031	X = 663336.377	Y = 8801736.122				
541	X = 663338.928	Y = 8801691.472	X = 663320.557	Y = 8801699.383	X = 663336.377	Y = 8801736.122	X = 663354.746	Y = 8801728.212				
542	X = 663357.296	Y = 8801683.563	X = 663338.928	Y = 8801691.472	X = 663354.746	Y = 8801728.212	X = 663373.115	Y = 8801720.301				
543	X = 663375.764	Y = 8801675.611	X = 663357.296	Y = 8801683.563	X = 663373.115	Y = 8801720.301	X = 663391.709	Y = 8801712.296				
544	X = 663394.569	Y = 8801667.514	X = 663375.764	Y = 8801675.611	X = 663391.709	Y = 8801712.296	X = 663406.370	Y = 8801705.983	X = 663408.847	Y = 8801700.560		
545	X = 663427.757	Y = 8801696.775	X = 663422.513	Y = 8801694.677	X = 663408.277	Y = 8801661.612	X = 663426.988	Y = 8801653.556	X = 663442.807	Y = 8801690.295		
546	X = 663461.176	Y = 8801682.386	X = 663445.358	Y = 8801645.646	X = 663426.988	Y = 8801653.556	X = 663442.807	Y = 8801690.295				
547	X = 663461.176	Y = 8801682.386	X = 663445.358	Y = 8801645.646	X = 663479.546	Y = 8801674.476	X = 663463.727	Y = 8801637.737				
548	X = 663497.916	Y = 8801666.567	X = 663482.097	Y = 8801629.827	X = 663479.546	Y = 8801674.476	X = 663463.727	Y = 8801637.737				
549	X = 663497.916	Y = 8801666.567	X = 663482.097	Y = 8801629.827	X = 663516.285	Y = 8801658.658	X = 663500.467	Y = 8801621.918				

STAND NO:												
REFUSE SLAB												
140	X = 663253.292	Y = 8800878.694	X = 663250.340	Y = 8800879.226	X = 663249.099	Y = 8800872.337	X = 663252.051	Y = 8800871.805				
444	X = 663223.031	Y = 8801282.717	X = 663225.609	Y = 8801289.225	X = 663228.398	Y = 8801288.12	X = 663225.821	Y = 8801281.613				
1009	X = 662783.708	Y = 8800974.366	X = 662781.070	Y = 8800975.794	X = 662777.738	Y = 8800969.638	X = 662780.376	Y = 8800968.210				
1030	X = 662868.225	Y = 8801713.395	X = 662870.021	Y = 8801715.798	X = 662870.021	Y = 8801715.798	X = 662862.617	Y = 8801717.585				
CEMETERY												
	X = 662885.587	Y = 8800605.425	X = 662995.587	Y = 8800605.425	X = 662885.587	Y = 8800505.425	X = 662995.585	Y = 8800505.425				
(FUTURE)	X = 662995.587	Y = 8800605.425	X = 663105.587	Y = 8800605.425	X = 663105.587	Y = 8800505.425	X = 662995.585	Y = 8800505.425				

NOTES

REFERENCE DRAWINGS:
SITE SETTING OUT LAYOUT
C00290-00-TP-DAL-0001-001

SITE SETTING OUT CO ORDINATE
C00290-00-TP-DAL-0013-001
C00290-00-TP-DAL-0013-002
C00290-00-TP-DAL-0013-003
C00290-00-TP-DAL-0013-005

ISSUED FOR CONSTRUCTION

WorleyParsons RSA retains the copyright in all intellectual property, including designs and/or documents prepared in terms of this appointment for the project covered by the appointment. The client may use the designs and/or documents for the sole purpose of their intended use on this project only subject to payment for the design having been received. Use for any other purpose, whether or not the design and/or documents have been paid for constitutes an infringement of copyright, and all rights are reserved.

All dimensions must be verified on site before the works commence. Refer any discrepancies to the Engineer.

Copyright reserved

REVISIONS

NO.	DATE	CHECKED	DONE BY	DESCRIPTION
A	16/10/15		RJ	ISSUED FOR INTERNAL REVIEW
B	17/10/15		AR	ISSUED FOR DETAIL DESIGN
C	18/10/15		AR	ISSUED FOR SQUAD CHECK
D	23/10/15		AR	ISSUED FOR CLIENT REVIEW
E	25/11/15		CT	ISSUED FOR CLIENT APPROVAL
0	7/12/2015		CT	ISSUED FOR CONSTRUCTION

WorleyParsons
resources & energy

39 MELROSE BOULEVARD, MELROSE ARCH, JOHANNESBURG
P.O. Box 61232, MARSHALLTOWN, 2107
TEL: +27 (0)11 218 3000
FAX: +27(0)11 218 3100
www.worleyparsons.com
WorleyParsons RSA (Pty) Ltd.

	NAME	SIGNATURE	DATE
DRAWN BY:	R J		15/10/2015
CHECKED:	L. PADAYACHEE		15/10/15
DESIGNER:	R.van SCHALKWYK		15/10/15
PR ENG:	D.du TOIT		14/10/15
PROJECT ENG MANAGER:	L. PADAYACHEE		15/10/15
LOCAL PR ENG:			
CLIENT:			

CLIENT

MOZAMBIQUE GAS DEVELOPMENT PROJECT

Anadarko
Moçambique Área 1, Lda

PROJECT
AMA 1
RESETTLEMENT
VILLAGE

DRAWING DESCRIPTION
RESETTLEMENT VILLAGE
SITE SETTING OUT
CO-ORDINATE LIST

SHEET 4 OF 5

SCALE	DATE
ORIGINAL DWG SIZE A1	DESEMBER 2015

DRAWING NUMBER	REV NO
C00290-00-TP-DAL-0013-004	0

ANADARKO DRAWING NUMBER
EA-MZ-CI0000-WOR-E04-00059-04

STAND NO:												
285	X = 663219.170	Y = 8801327.250	X = 663200.594	Y = 8801334.663	X = 663215.320	Y = 8801371.812	X = 663233.913	Y = 8801364.442				
286	X = 663219.170	Y = 8801327.250	X = 663237.765	Y = 8801319.887	X = 663233.913	Y = 8801364.442	X = 663252.505	Y = 8801357.072				
287	X = 663271.098	Y = 8801349.702	X = 663237.765	Y = 8801319.887	X = 663256.358	Y = 8801312.517	X = 663252.505	Y = 8801357.072				
288	X = 663316.000	Y = 8801289.016	X = 663330.678	Y = 8801326.132	X = 663349.277	Y = 8801318.777	X = 663334.575	Y = 8801281.601				
289	X = 663367.875	Y = 8801311.422	X = 663353.165	Y = 8801274.225	X = 663349.277	Y = 8801318.777	X = 663334.575	Y = 8801281.601				
290	X = 663381.408	Y = 8801263.216	X = 663367.875	Y = 8801311.422	X = 663353.165	Y = 8801274.225	X = 663379.678	Y = 8801306.873				
291	X = 663381.408	Y = 8801263.216	X = 663379.678	Y = 8801306.873	X = 663395.937	Y = 8801314.801	X = 663413.468	Y = 8801278.848				
292	X = 663413.914	Y = 8801323.567	X = 663431.445	Y = 8801287.613	X = 663395.937	Y = 8801314.801	X = 663413.468	Y = 8801278.848				
293	X = 663413.914	Y = 8801323.567	X = 663431.445	Y = 8801287.613	X = 663431.890	Y = 8801332.333	X = 663449.421	Y = 8801296.379				
294	X = 663370.185	Y = 8801326.531	X = 663351.608	Y = 8801333.902	X = 663366.367	Y = 8801371.095	X = 663384.955	Y = 8801363.715				
295	X = 663366.367	Y = 8801371.095	X = 663351.608	Y = 8801333.902	X = 663333.029	Y = 8801341.267	X = 663347.769	Y = 8801378.452				
296	X = 663284.040	Y = 8801360.656	X = 663265.471	Y = 8801368.085	X = 663280.211	Y = 8801405.270	X = 663298.804	Y = 8801397.900				
297	X = 663265.471	Y = 8801368.085	X = 663280.211	Y = 8801405.270	X = 663246.854	Y = 8801375.394	X = 663261.618	Y = 8801412.638				
298	X = 663228.286	Y = 8801382.825	X = 663243.026	Y = 8801420.009	X = 663246.854	Y = 8801375.394	X = 663261.618	Y = 8801412.638				
299	X = 663228.286	Y = 8801382.825	X = 663243.026	Y = 8801420.009	X = 663209.664	Y = 8801390.122	X = 663224.434	Y = 8801427.380				
300	X = 663191.069	Y = 8801397.486	X = 663205.847	Y = 8801434.748	X = 663209.664	Y = 8801390.122	X = 663224.434	Y = 8801427.380				
301	X = 663191.069	Y = 8801397.486	X = 663205.847	Y = 8801434.748	X = 663172.475	Y = 8801404.850	X = 663187.255	Y = 8801442.136				
302	X = 663172.475	Y = 8801404.850	X = 663153.880	Y = 8801412.214	X = 663168.656	Y = 8801449.490	X = 663187.255	Y = 8801442.136				
303	X = 663127.779	Y = 8801422.550	X = 663153.880	Y = 8801412.214	X = 663168.656	Y = 8801449.490	X = 663146.313	Y = 8801458.347				
304	X = 663072.786	Y = 8801444.336	X = 663056.051	Y = 8801450.962	X = 663070.764	Y = 8801488.152	X = 663094.452	Y = 8801478.781				
305	X = 663037.456	Y = 8801458.325	X = 663056.051	Y = 8801450.962	X = 663070.764	Y = 8801488.152	X = 663052.167	Y = 8801495.509				
306	X = 663037.456	Y = 8801458.325	X = 663018.861	Y = 8801465.687	X = 663033.575	Y = 8801502.882	X = 663052.167	Y = 8801495.509				
307	X = 663000.265	Y = 8801473.050	X = 663018.861	Y = 8801465.687	X = 663033.575	Y = 8801502.882	X = 663014.972	Y = 8801510.224				
308	X = 663000.265	Y = 8801473.050	X = 662994.539	Y = 8801518.378	X = 662982.214	Y = 8801480.198	X = 663014.972	Y = 8801510.224	X = 662980.092	Y = 8801485.340		
309	X = 662960.862	Y = 8801488.778	X = 662966.187	Y = 8801490.973	X = 662946.425	Y = 8801494.489	X = 662980.618	Y = 8801523.979	X = 662961.140	Y = 8801531.685		
310	X = 662927.828	Y = 8801501.847	X = 662942.543	Y = 8801539.042	X = 662946.425	Y = 8801494.489	X = 662961.140	Y = 8801531.685				
311	X = 662927.828	Y = 8801501.847	X = 662942.543	Y = 8801539.042	X = 662909.230	Y = 8801509.204	X = 662923.945	Y = 8801546.399				
312	X = 662909.230	Y = 8801509.204	X = 662890.633	Y = 8801516.562	X = 662905.348	Y = 8801553.757	X = 662923.945	Y = 8801546.399				
313	X = 662886.190	Y = 8801522.621	X = 662890.633	Y = 8801516.562	X = 662905.348	Y = 8801553.757	X = 662879.507	Y = 8801563.980				
314	X = 662870.226	Y = 8801518.317	X = 662830.261	Y = 8801515.800	X = 662829.789	Y = 8801522.805	X = 662869.503	Y = 8801528.955	X = 662828.083	Y = 8801533.818	X = 662867.663	Y = 8801540.718
315	X = 662828.083	Y = 8801533.818	X = 662867.663	Y = 8801540.718	X = 662825.023	Y = 8801553.583	X = 662864.573	Y = 8801560.467				
316	X = 662825.023	Y = 8801553.583	X = 662864.573	Y = 8801560.467	X = 662821.962	Y = 8801573.350	X = 662861.478	Y = 8801580.247				
317	X = 662821.962	Y = 8801573.350	X = 662861.478	Y = 8801580.247	X = 662818.901	Y = 8801593.114	X = 662858.389	Y = 8801599.991				
318	X = 662879.507	Y = 8801563.980	X = 662873.557	Y = 8801600.796	X = 662880.688	Y = 8801606.529	X = 662901.461	Y = 8801598.313	X = 662886.745	Y = 8801561.116		
319	X = 662905.348	Y = 8801553.757	X = 662901.461	Y = 8801598.313	X = 662886.745	Y = 8801561.116	X = 662920.062	Y = 8801590.952				
320	X = 662923.945	Y = 8801546.399	X = 662905.348	Y = 8801553.757	X = 662920.062	Y = 8801590.952	X = 662938.660	Y = 8801583.594				
321	X = 662942.543	Y = 8801539.042	X = 662923.945	Y = 8801546.399	X = 662938.660	Y = 8801583.594	X = 662957.257	Y = 8801576.237				
322	X = 662961.140	Y = 8801531.685	X = 662942.543	Y = 8801539.042	X = 662957.257	Y = 8801576.237	X = 662975.855	Y = 8801568.880				
323	X = 662980.618	Y = 8801523.979	X = 662961.140	Y = 8801531.685	X = 662975.855	Y = 8801568.880	X = 662992.930	Y = 8801562.125	X = 662995.036	Y = 8801556.953		
324	X = 663014.972	Y = 8801510.224	X = 662994.539	Y = 8801518.378	X = 663008.986	Y = 8801551.416	X = 663014.312	Y = 8801553.609	X = 663029.718	Y = 8801547.498		
325	X = 663033.575	Y = 8801502.882	X = 663014.972	Y = 8801510.224	X = 663029.718	Y = 8801547.498	X = 663048.310	Y = 8801540.123				
326	X = 663052.167	Y = 8801495.509	X = 663033.575	Y = 8801502.882	X = 663048.310	Y = 8801540.123	X = 663066.899	Y = 8801532.749				
327	X = 663070.764	Y = 8801488.152	X = 663052.167	Y = 8801495.509	X = 663066.899	Y = 8801532.749	X = 663085.490	Y = 8801525.375				
328	X = 663070.764	Y = 8801488.152	X = 663094.452	Y = 8801478.781	X = 663085.490	Y = 8801525.375	X = 663116.118	Y = 8801513.226				
329	X = 663164.782	Y = 8801494.019	X = 663183.386	Y = 8801486.649	X = 663146.313	Y = 8801458.347	X = 663168.656	Y = 8801449.490				
330	X = 663201.980	Y = 8801479.283	X = 663187.248	Y = 8801442.120	X = 663183.386	Y = 8801486.649	X = 663168.656	Y = 8801449.490				
331	X = 663201.980	Y = 8801479.283	X = 663187.248	Y = 8801442.120	X = 663220.574	Y = 8801471.917	X = 663205.841	Y = 8801434.750				
332	X = 663239.168	Y = 8801464.550	X = 663224.428	Y = 8801427.383	X = 663220.574	Y = 8801471.917	X = 663205.841	Y = 8801434.750				
333	X = 663239.168	Y = 8801464.550	X = 663224.428	Y = 8801427.383	X = 663257.793	Y = 8801457.263	X = 663243.026	Y = 8801420.010				
334	X = 663276.356	Y = 8801449.818	X = 663261.619	Y = 8801412.640	X = 663257.793	Y = 8801457.263	X = 663243.026	Y = 8801420.010				
335	X = 663276.356	Y = 8801449.818	X = 663261.619	Y = 8801412.640	X = 663294.950	Y = 8801442.451	X = 663280.211	Y = 8801405.270				
336	X = 663313.544	Y = 8801435.085	X = 663298.804	Y = 8801397.900	X = 663294.950	Y = 8801442.451	X = 663280.211	Y = 8801405.270				
337	X = 663347.769	Y = 8801378.452	X = 663362.509	Y = 8801415.637	X = 663381.101	Y = 8801408.267	X = 663366.356	Y = 8801371.068				
338	X = 663399.694	Y = 8801400.897	X = 663384.954	Y = 8801363.712	X = 663381.101	Y = 8801408.267	X = 663366.356	Y = 8801371.068				
339	X = 663399.694	Y = 8801400.897	X = 663384.954	Y = 8801363.712	X = 663418.286	Y = 8801393.527	X = 663403.546	Y = 8801356.342				
340	X = 663436.879	Y = 8801386.157	X = 663422.139	Y = 8801348.972	X = 663418.286	Y = 8801393.527	X = 663403.546	Y = 8801356.342				
341	X = 663436.879	Y = 8801386.157	X = 663422.139	Y = 8801348.972	X = 663426.787	Y = 8801347.129	X = 663440.253	Y = 8801352.871	X = 663462.499	Y = 8801367.752	X = 663461.520	Y = 8801376.389
342	X = 663431.890	Y = 8801332.333	X = 663449.421	Y = 8801296.379	X = 663449.862	Y = 8801341.136	X = 663469.623	Y = 8801306.229				
343	X = 663466.495	Y = 8801352.268	X = 663488.743	Y = 8801319.026	X = 663449.862	Y = 8801341.136	X = 663469.623	Y = 8801306.229				
344	X = 663466.495	Y = 8801352.268	X = 663488.743	Y = 8801319.026	X = 663483.116	Y = 8801363.392	X = 663505.364	Y = 8801330.150				
345	X = 663487.449	Y = 8801366.292	X = 663509.698	Y = 8801333.051	X = 663504.070	Y = 8801377.416	X = 663526.318	Y = 8801344.174				
346	X = 663520.691	Y = 8801388.540	X = 663542.939	Y = 8801355.298	X = 663504.070	Y = 8801377.416	X = 663526.318	Y = 8801344.174				
347	X = 663520.691	Y = 8801388.540	X = 663542.939	Y = 8801355.298	X = 663537.311	Y = 8801399.664	X = 663559.560	Y = 8801366.422				
348	X = 663553.248	Y = 8801411.778	X = 663578.572	Y = 8801380.821	X = 663537.311	Y = 8801399.664	X = 663559.560	Y = 8801366.422				
349	X = 663553.248	Y = 8801411.778	X = 663578.572	Y = 8801380.821	X = 663568.725	Y = 8801424.445	X = 663594.052	Y = 8801393.485				
350	X = 663584.205	Y = 8801437.109	X = 663609.532	Y = 8801406.148	X = 663568.725	Y = 8801424.445	X = 663594.052	Y = 8801393.485				
351	X = 663584.205	Y = 8801437.109	X = 663609.532	Y = 8801406.148	X = 663599.685	Y = 8801449.772	X = 663625.012	Y = 8801418.812				
352	X = 663615.286	Y = 8801467.777	X = 663648.330	Y = 8801445.237	X = 663599.685	Y = 8801449.772	X = 663625.012	Y = 8801418.812	X = 663607.195	Y = 8801455.915	X = 663636.988	Y = 8801428.608
353	X = 663615.286	Y = 8801467.777	X = 663648.330	Y = 8801445.237	X = 663626.556	Y = 8801484.299	X = 663659.600	Y = 8801461.759				
354	X = 663615.241	Y = 8801514.949	X = 663621.161	Y = 8801502.604	X = 663580.301	Y = 8801499.128	X = 663600.674	Y = 8801474.005				
355	X = 663570.504	Y = 8801494.692	X = 663594.030	Y = 8801464.731	X = 663580.301	Y = 8801499.128	X = 663600.674	Y = 8801474.005	X = 663560.438	Y = 8801487.106	X = 663584.693	Y = 8801457.196
356	X = 663543.777	Y = 8801474.310	X = 663568.351	Y = 8801444.007	X = 663584.693	Y = 8801457.196	X = 663560.438	Y = 8801487.106				
357	X = 663543.777	Y = 8801474.310	X = 663568.351	Y = 8801444.007	X = 663527.116	Y = 8801461.515	X = 663552.009	Y = 8801430.818				
358	X = 663511.652	Y = 8801449.624	X = 663535.244	Y = 8801417.325	X = 663527.116	Y = 8801461.515	X = 663552.009	Y = 8801430.818				
359	X = 663511.652	Y = 8801449.624	X = 663535.244	Y = 8801417.325	X = 663495.548	Y = 8801439.274	X = 663517.898	Y = 8801405.858				
360	X = 663479.053	Y = 8801428.710	X = 663501.032	Y = 8801394.800	X = 663495.548	Y = 8801439.274	X = 663517.898	Y = 8801405.858				
361	X = 663479.053	Y = 8801428.710	X = 663501.032	Y = 8801394.800	X = 663487.446	Y = 8801385.892	X = 663479.076	Y = 8801385.685	X = 663464.315	Y = 8801391.530		
362	X = 663479.053	Y = 8801428.710	X = 663460.460	Y = 8801436.080	X = 663445.720	Y = 8801398.895	X = 663464.315	Y = 8801391.530				
363	X = 663427.125	Y = 8801406.259	X = 663460.460	Y = 8801436.080	X = 663445.720	Y = 8801398.895	X = 663441.868	Y = 8801443.450				
364	X = 663423.275	Y = 8801450.820	X = 663408.530	Y = 8801413.623	X = 663427.125	Y = 8801406.259	X = 663441.868	Y = 8801443.450				
365	X = 663423.275	Y = 8801450.820	X = 663408.530	Y = 8801413.623	X = 663404.683	Y = 8801458.190	X = 663389.935	Y = 8801420.987				

STAND NO:												
366	X = 663386.090	Y = 8801465.560	X = 663371.352	Y = 8801428.346	X = 663404.683	Y = 8801458.190	X = 663389.935	Y = 8801420.987				
367	X = 663336.573	Y = 8801484.376	X = 663322.584	Y = 8801447.658	X = 663303.335	Y = 8801455.281	X = 663317.815	Y = 8801492.101				
368	X = 663284.475	Y = 8801462.747	X = 663299.056	Y = 8801499.825	X = 663303.335	Y = 8801455.281	X = 663317.815	Y = 8801492.101				
369	X = 663284.475	Y = 8801462.747	X = 663299.056	Y = 8801499.825	X = 663265.615	Y = 8801470.218	X = 663280.297	Y = 8801507.550				
370	X = 663247.021	Y = 8801477.581	X = 663261.816	Y = 8801515.161	X = 663265.615	Y = 8801470.218	X = 663280.297	Y = 8801507.550				
371	X = 663247.021	Y = 8801477.581	X = 663261.816	Y = 8801515.161	X = 663228.426	Y = 8801484.945	X = 663243.330	Y = 8801522.773				
372	X = 663207.158	Y = 8801493.371	X = 663223.446	Y = 8801530.961	X = 663228.426	Y = 8801484.945	X = 663243.330	Y = 8801522.773				
373	X = 663207.158	Y = 8801493.371	X = 663223.446	Y = 8801530.961	X = 663186.615	Y = 8801501.503	X = 663204.118	Y = 8801538.920				
374	X = 663147.498	Y = 8801561.590	X = 663131.156	Y = 8801523.605	X = 663111.176	Y = 8801531.493	X = 663126.622	Y = 8801570.578				
375	X = 663092.582	Y = 8801538.834	X = 663108.253	Y = 8801578.488	X = 663111.176	Y = 8801531.493	X = 663126.622	Y = 8801570.578				
376	X = 663092.582	Y = 8801538.834	X = 663108.253	Y = 8801578.488	X = 663073.987	Y = 8801546.175	X = 663089.883	Y = 8801586.397				
377	X = 663055.393	Y = 8801553.516	X = 663071.514	Y = 8801594.307	X = 663073.987	Y = 8801546.175	X = 663089.883	Y = 8801586.397				
378	X = 663055.393	Y = 8801553.516	X = 663071.514	Y = 8801594.307	X = 663036.799	Y = 8801560.857	X = 663053.145	Y = 8801602.216				
379	X = 663020.324	Y = 8801567.361	X = 663018.207	Y = 8801572.502	X = 663036.799	Y = 8801560.857	X = 663053.145	Y = 8801602.216	X = 663034.676	Y = 8801610.169		
380	X = 662998.927	Y = 8801575.835	X = 663004.252	Y = 8801578.029	X = 663020.839	Y = 8801615.944	X = 662985.529	Y = 8801581.141	X = 663002.458	Y = 8801623.825		
381	X = 662985.529	Y = 8801581.141	X = 663002.458	Y = 8801623.825	X = 662966.934	Y = 8801588.505	X = 662984.121	Y = 8801631.810				
382	X = 662948.339	Y = 8801595.869	X = 662965.760	Y = 8801639.740	X = 662966.934	Y = 8801588.505	X = 662984.121	Y = 8801631.810				
383	X = 662948.339	Y = 8801595.869	X = 662965.760	Y = 8801639.740	X = 662929.744	Y = 8801603.233	X = 662947.397	Y = 8801647.665				
384	X = 662911.150	Y = 8801610.597	X = 662929.037	Y = 8801655.596	X = 662929.744	Y = 8801603.233	X = 662947.397	Y = 8801647.665				
385	X = 662911.150	Y = 8801610.597	X = 662929.037	Y = 8801655.596	X = 662892.555	Y = 8801617.961	X = 662910.676	Y = 8801663.527				
386	X = 662874.271	Y = 8801626.108	X = 662892.316	Y = 8801671.456	X = 662892.555	Y = 8801617.961	X = 662910.676	Y = 8801663.527				
387	X = 662874.271	Y = 8801626.108	X = 662892.316	Y = 8801671.456	X = 662868.589	Y = 8801630.860	X = 662865.364	Y = 8801653.841	X = 662865.632	Y = 8801676.405	X = 662867.700	Y = 8801682.085
388	X = 662858.388	Y = 8801599.997	X = 662818.901	Y = 8801593.114	X = 662815.872	Y = 8801612.883	X = 662855.297	Y = 8801619.757				
389	X = 662812.786	Y = 8801632.609	X = 662852.200	Y = 8801639.516	X = 662815.872	Y = 8801612.883	X = 662855.297	Y = 8801619.757				
390	X = 662812.786	Y = 8801632.609	X = 662852.200	Y = 8801639.516	X = 662809.351	Y = 8801652.312	X = 662848.753	Y = 8801659.216				
391	X = 662811.244	Y = 8801687.291	X = 662850.458	Y = 8801679.399	X = 662809.351	Y = 8801652.312	X = 662848.753	Y = 8801659.216				
392	X = 662811.244	Y = 8801687.291	X = 662850.458	Y = 8801679.399	X = 662824.210	Y = 8801721.313	X = 662856.255	Y = 8801697.373				
393	X = 662836.181	Y = 8801737.336	X = 662868.225	Y = 8801713.395	X = 662824.210	Y = 8801721.313	X = 662856.255	Y = 8801697.373				
394	X = 662892.316	Y = 8801671.456	X = 662867.700	Y = 8801682.085	X = 662871.331	Y = 8801692.058	X = 662891.138	Y = 8801717.981	X = 662910.345	Y = 8801712.696		
395	X = 662910.676	Y = 8801663.527	X = 662892.316	Y = 8801671.456	X = 662910.345	Y = 8801712.696	X = 662928.722	Y = 8801704.790				
396	X = 662929.037	Y = 8801655.596	X = 662910.676	Y = 8801663.527	X = 662928.722	Y = 8801704.790	X = 662947.087	Y = 8801696.882				
397	X = 662947.397	Y = 8801647.665	X = 662929.037	Y = 8801655.596	X = 662947.087	Y = 8801696.882	X = 662965.461	Y = 8801688.971				
398	X = 662965.760	Y = 8801639.740	X = 662947.397	Y = 8801647.665	X = 662965.461	Y = 8801688.971	X = 662983.831	Y = 8801681.061				
399	X = 662984.121	Y = 8801631.810	X = 662965.760	Y = 8801639.740	X = 662983.831	Y = 8801681.061	X = 663002.195	Y = 8801673.148				
400	X = 663002.458	Y = 8801623.825	X = 662984.121	Y = 8801631.810	X = 663002.195	Y = 8801673.148	X = 663020.567	Y = 8801665.244				
401	X = 663020.839	Y = 8801615.944	X = 663002.458	Y = 8801623.825	X = 663020.567	Y = 8801665.244	X = 663035.263	Y = 8801658.916	X = 663037.326	Y = 8801653.673		
402	X = 663053.145	Y = 8801602.216	X = 663034.676	Y = 8801610.169	X = 663051.103	Y = 8801647.740	X = 663056.380	Y = 8801649.823	X = 663071.085	Y = 8801643.486		
403	X = 663071.514	Y = 8801594.307	X = 663053.145	Y = 8801602.216	X = 663071.085	Y = 8801643.486	X = 663089.456	Y = 8801635.580				
404	X = 663089.883	Y = 8801586.397	X = 663071.514	Y = 8801594.307	X = 663089.456	Y = 8801635.580	X = 663107.826	Y = 8801627.670				
405	X = 663108.253	Y = 8801578.488	X = 663089.883	Y = 8801586.397	X = 663107.826	Y = 8801627.670	X = 663126.195	Y = 8801619.760				
406	X = 663126.622	Y = 8801570.578	X = 663108.253	Y = 8801578.488	X = 663126.195	Y = 8801619.760	X = 663144.564	Y = 8801611.849				
407	X = 663147.498	Y = 8801561.590	X = 663126.622	Y = 8801570.578	X = 663144.564	Y = 8801611.849	X = 663165.288	Y = 8801602.929				
408	X = 663223.446	Y = 8801530.961	X = 663204.118	Y = 8801538.920	X = 663240.587	Y = 8801570.518	X = 663222.534	Y = 8801578.291				
409	X = 663243.330	Y = 8801522.773	X = 663223.446	Y = 8801530.961	X = 663240.587	Y = 8801570.518	X = 663258.966	Y = 8801562.605				
410	X = 663261.816	Y = 8801515.161	X = 663243.330	Y = 8801522.773	X = 663258.966	Y = 8801562.605	X = 663277.345	Y = 8801554.691				
411	X = 663280.297	Y = 8801507.550	X = 663261.816	Y = 8801515.161	X = 663277.345	Y = 8801554.691	X = 663295.719	Y = 8801546.770				
412	X = 663299.056	Y = 8801499.825	X = 663280.297	Y = 8801507.550	X = 663295.719	Y = 8801546.770	X = 663314.364	Y = 8801538.751				
413	X = 663317.815	Y = 8801492.101	X = 663299.056	Y = 8801499.825	X = 663314.364	Y = 8801538.751	X = 663333.004	Y = 8801530.726				
414	X = 663336.573	Y = 8801484.376	X = 663317.815	Y = 8801492.101	X = 663333.004	Y = 8801530.726	X = 663351.240	Y = 8801522.874				
415	X = 663392.746	Y = 8801477.226	X = 663396.490	Y = 8801510.654	X = 663418.354	Y = 8801508.205	X = 663413.903	Y = 8801468.454				
416	X = 663438.229	Y = 8801505.979	X = 663433.789	Y = 8801466.226	X = 663418.354	Y = 8801508.205	X = 663413.903	Y = 8801468.454				
417	X = 663438.229	Y = 8801505.979	X = 663433.789	Y = 8801466.226	X = 663458.105	Y = 8801503.753	X = 663453.653	Y = 8801464.001				
418	X = 663477.981	Y = 8801501.526	X = 663473.528	Y = 8801461.775	X = 663458.105	Y = 8801503.753	X = 663453.653	Y = 8801464.001				
419	X = 663477.981	Y = 8801501.526	X = 663473.528	Y = 8801461.775	X = 663497.856	Y = 8801499.300	X = 663493.404	Y = 8801459.549				
420	X = 663511.640	Y = 8801502.579	X = 663525.299	Y = 8801474.088	X = 663497.856	Y = 8801499.300	X = 663493.404	Y = 8801459.549				
421	X = 663511.640	Y = 8801502.579	X = 663525.299	Y = 8801474.088	X = 663534.583	Y = 8801513.572	X = 663548.441	Y = 8801484.651				
422	X = 663557.075	Y = 8801524.349	X = 663570.504	Y = 8801494.692	X = 663534.583	Y = 8801513.572	X = 663548.441	Y = 8801484.651				
423	X = 663557.075	Y = 8801524.349	X = 663570.504	Y = 8801494.692	X = 663578.936	Y = 8801534.824	X = 663593.234	Y = 8801504.984				
424	X = 663600.708	Y = 8801545.256	X = 663615.241	Y = 8801514.949	X = 663578.936	Y = 8801534.824	X = 663593.234	Y = 8801504.984				
425	X = 663600.708	Y = 8801545.256	X = 663621.161	Y = 8801502.604	X = 663634.096	Y = 8801520.661	X = 663618.267	Y = 8801553.670				
426	X = 663641.949	Y = 8801565.017	X = 663647.548	Y = 8801563.265	X = 663634.096	Y = 8801520.661	X = 663618.267	Y = 8801553.670	X = 663653.484	Y = 8801552.834	X = 663651.226	Y = 8801544.574
427	X = 663626.556	Y = 8801484.299	X = 663659.600	Y = 8801461.759	X = 663637.826	Y = 8801500.822	X = 663670.870	Y = 8801478.282				
428	X = 663649.095	Y = 8801517.344	X = 663682.140	Y = 8801494.804	X = 663637.826	Y = 8801500.822	X = 663670.870	Y = 8801478.282				
429	X = 663649.095	Y = 8801517.344	X = 663682.140	Y = 8801494.804	X = 663660.365	Y = 8801533.866	X = 663693.410	Y = 8801511.326				
430	X = 663671.260	Y = 8801550.443	X = 663718.398	Y = 8801548.560	X = 663660.365	Y = 8801533.866	X = 663693.410	Y = 8801511.326				
431	X = 663671.260	Y = 8801550.443	X = 663718.398	Y = 8801548.560	X = 663666.384	Y = 8801558.983	X = 663701.122	Y = 8801578.815				
432	X = 663656.469	Y = 8801576.352	X = 663691.207	Y = 8801596.183	X = 663666.384	Y = 8801558.983	X = 663701.122	Y = 8801578.815				
433	X = 663656.469	Y = 8801576.352	X = 663691.207	Y = 8801596.183	X = 663646.553	Y = 8801593.721	X = 663681.291	Y = 8801613.552				
434	X = 663636.638	Y = 8801611.090	X = 663671.376	Y = 8801630.921	X = 663646.553	Y = 8801593.721	X = 663681.291	Y = 8801613.552				
435	X = 663636.160	Y = 8801583.277	X = 663634.511	Y = 8801578.087	X = 663614.978	Y = 8801568.705	X = 663598.136	Y = 8801603.881	X = 663618.803	Y = 8801613.777		
436	X = 663596.039	Y = 8801559.652	X = 663579.195	Y = 8801594.805	X = 663614.978	Y = 8801568.705	X = 663598.136	Y = 8801603.881				
437	X = 663596.039	Y = 8801559.652	X = 663579.195	Y = 8801594.805	X = 663577.118	Y = 8801550.564	X = 663560.265	Y = 8801585.735				
438	X = 663558.187	Y = 8801541.493	X = 663541.335	Y = 8801576.664	X = 663577.118	Y = 8801550.564	X = 663560.265	Y = 8801585.735				
439	X = 663558.187	Y = 8801541.493	X = 663541.335	Y = 8801576.664	X = 663539.257	Y = 8801532.422	X = 663522.405	Y = 8801567.593				
440	X = 663520.327	Y = 8801523.352	X = 663503.474	Y = 8801558.523	X = 663539.257	Y = 8801532.422	X = 663522.405	Y = 8801567.593				
441	X = 663520.327	Y = 8801523.352	X = 663503.474	Y = 8801558.523	X = 663507.688	Y = 8801517.318	X = 663493.414	Y = 8801514.892	X = 663491.711	Y = 8801552.886		
442	X = 663470.118	Y = 8801557.751	X = 663485.666	Y = 8801518.000	X = 663493.414	Y = 8801514.892	X = 663491.711	Y = 8801552.886	X = 663481.160	Y = 8801556.514		
443	X = 663470.118	Y = 8801557.751	X = 663485.666	Y = 8801518.000	X = 663450.242	Y = 8801559.977	X = 663445.790	Y = 8801520.226				
444	X = 663430.367	Y = 8801562.203	X = 663425.914	Y = 8801522.452	X = 663450.242	Y = 8801559.977	X = 663445.790	Y = 8801520.226				
445	X = 663359.275	Y = 8801535.728	X = 663340.906	Y = 8801543.638	X = 663375.095	Y = 8801572.467	X = 663356.725	Y = 8801580.377				
446	X = 663322.537	Y = 8801551.547	X = 663340.906	Y = 8801543.638	X = 663338.357	Y = 8801588.286	X = 663356.725	Y = 8801580.377				

NOTES

REFERENCE DRAWINGS:

SITE SETTING OUT LAYOUT
C00290-00-TP-DAL-0001-001

SITE SETTING OUT CO ORDINATE
C00290-00-TP-DAL-0013-001
C00290-00-TP-DAL-0013-002
C00290-00-TP-DAL-0013-004
C00290-00-TP-DAL-0013-005

ISSUED FOR CONSTRUCTION

WorleyParsons RSA retains the copyright in all intellectual property, including designs and/or documents prepared in terms of this appointment for the project covered by the appointment. The client may use the designs and/or documents for the sole purpose of their intended use on this project only subject to payment for the design having been received. Use for any other purpose, whether or not the design and/or documents have been paid for constitutes an infringement of copyright, and all rights are reserved.

All dimensions must be verified on site before the works commence. Refer any discrepancies to the Engineer.

Copyright reserved

REVISIONS

NO.	DATE	CHECKED	DONE BY	DESCRIPTION
A	16/10/15		RJ	ISSUED FOR INTERNAL REVIEW
B	17/10/15		AR	ISSUED FOR DETAIL DESIGN
C	18/10/15		AR	ISSUED FOR SQUAD CHECK
D	23/10/15		AR	ISSUED FOR CLIENT REVIEW
E	25/11/15		CT	ISSUED FOR CLIENT APPROVAL
0	07/12/20 15		CT	ISSUED FOR CONSTRUCTION

WorleyParsons
resources & energy
39 MELROSE BOULEVARD, MELROSE ARCH, JOHANNESBURG
P.O. Box 61232, MARSHALLTOWN, 2107
TEL: +27 (0)11 218 3000
FAX: +27(0)11 218 3100
www.worleyparsons.com
WorleyParsons RSA (Pty) Ltd.

	NAME	SIGNATURE	DATE
DRAWN BY:	R J

STAND NO:												
156	X = 663137.257	Y = 8800955.484	X = 663164.032	Y = 8800991.305	X = 663144.349	Y = 8800994.851	X = 663156.883	Y = 8800951.948				
157	X = 663156.883	Y = 8800951.948	X = 663164.032	Y = 8800991.305	X = 663179.605	Y = 8800988.499	X = 663176.445	Y = 8800948.424	X = 663182.832	Y = 8800983.853		
158	X = 663191.207	Y = 8800945.765	X = 663197.585	Y = 8800981.187	X = 663202.214	Y = 8800984.426	X = 663218.191	Y = 8800981.547	X = 663211.100	Y = 8800942.181		
159	X = 663211.100	Y = 8800942.181	X = 663218.191	Y = 8800981.547	X = 663237.875	Y = 8800978.002	X = 663230.777	Y = 8800938.636				
160	X = 663230.777	Y = 8800938.636	X = 663257.557	Y = 8800974.452	X = 663237.875	Y = 8800978.002	X = 663250.479	Y = 8800935.086				
161	X = 663250.479	Y = 8800935.086	X = 663257.557	Y = 8800974.452	X = 663277.241	Y = 8800970.909	X = 663270.144	Y = 8800931.543				
162	X = 663270.144	Y = 8800931.543	X = 663296.924	Y = 8800967.363	X = 663277.241	Y = 8800970.909	X = 663289.832	Y = 8800927.997				
163	X = 663289.832	Y = 8800927.997	X = 663296.924	Y = 8800967.363	X = 663316.607	Y = 8800963.818	X = 663309.510	Y = 8800924.451				
164	X = 663336.290	Y = 8800960.268	X = 663329.193	Y = 8800920.905	X = 663316.607	Y = 8800963.818	X = 663309.510	Y = 8800924.451				
165	X = 663353.377	Y = 8800971.692	X = 663392.607	Y = 8800964.549	X = 663356.962	Y = 8800991.550	X = 663396.232	Y = 8800984.461				
166	X = 663356.962	Y = 8800991.550	X = 663396.232	Y = 8800984.461	X = 663360.536	Y = 8801011.347	X = 663399.837	Y = 8801004.252				
167	X = 663334.823	Y = 8800975.776	X = 663339.469	Y = 8800979.003	X = 663345.852	Y = 8801014.433	X = 663326.369	Y = 8801017.943	X = 663319.277	Y = 8800978.577		
168	X = 663299.594	Y = 8800982.123	X = 663287.003	Y = 8801025.035	X = 663319.277	Y = 8800978.577	X = 663326.369	Y = 8801017.943				
169	X = 663299.594	Y = 8800982.123	X = 663287.003	Y = 8801025.035	X = 663279.910	Y = 8800985.669	X = 663287.002	Y = 8801025.034				
170	X = 663279.910	Y = 8800985.669	X = 663260.227	Y = 8800989.215	X = 663267.320	Y = 8801028.581	X = 663287.002	Y = 8801025.034				
171	X = 663260.227	Y = 8800989.215	X = 663267.320	Y = 8801028.581	X = 663240.544	Y = 8800992.761	X = 663247.636	Y = 8801032.127				
172	X = 663220.861	Y = 8800996.307	X = 663227.953	Y = 8801035.674	X = 663240.544	Y = 8800992.761	X = 663247.636	Y = 8801032.127				
173	X = 663220.861	Y = 8800996.307	X = 663227.953	Y = 8801035.674	X = 663204.914	Y = 8800999.180	X = 663201.687	Y = 8801003.826				
174	X = 663182.266	Y = 8801003.261	X = 663186.913	Y = 8801006.488	X = 663193.300	Y = 8801041.917	X = 663166.744	Y = 8801006.058	X = 663173.836	Y = 8801045.424		
175	X = 663166.744	Y = 8801006.058	X = 663173.836	Y = 8801045.424	X = 663147.035	Y = 8801009.608	X = 663154.122	Y = 8801048.976				
176	X = 663127.347	Y = 8801013.156	X = 663134.439	Y = 8801052.522	X = 663147.035	Y = 8801009.608	X = 663154.122	Y = 8801048.976				
177	X = 663127.347	Y = 8801013.156	X = 663134.439	Y = 8801052.522	X = 663107.664	Y = 8801016.702	X = 663114.756	Y = 8801056.068				
178	X = 663107.664	Y = 8801016.702	X = 663114.756	Y = 8801056.068	X = 663087.974	Y = 8801020.249	X = 663095.066	Y = 8801059.615				
179	X = 663068.290	Y = 8801023.795	X = 663075.383	Y = 8801063.162	X = 663087.974	Y = 8801020.249	X = 663095.066	Y = 8801059.615				
180	X = 663068.290	Y = 8801023.795	X = 663075.383	Y = 8801063.162	X = 663052.333	Y = 8801026.670	X = 663049.106	Y = 8801031.315	X = 663055.496	Y = 8801066.744		
181	X = 663075.383	Y = 8801063.162	X = 663055.496	Y = 8801066.744	X = 663061.881	Y = 8801102.173	X = 663066.527	Y = 8801105.401	X = 663082.077	Y = 8801102.599		
182	X = 663095.066	Y = 8801059.615	X = 663075.383	Y = 8801063.162	X = 663082.077	Y = 8801102.599	X = 663101.761	Y = 8801099.053				
183	X = 663114.756	Y = 8801056.068	X = 663095.066	Y = 8801059.615	X = 663101.761	Y = 8801099.053	X = 663121.451	Y = 8801095.506				
184	X = 663134.439	Y = 8801052.522	X = 663114.756	Y = 8801056.068	X = 663121.451	Y = 8801095.506	X = 663141.134	Y = 8801091.960				
185	X = 663154.122	Y = 8801048.976	X = 663134.439	Y = 8801052.522	X = 663141.134	Y = 8801091.960	X = 663160.817	Y = 8801088.413				
186	X = 663173.836	Y = 8801045.424	X = 663154.122	Y = 8801048.976	X = 663160.817	Y = 8801088.413	X = 663180.493	Y = 8801084.869				
187	X = 663193.300	Y = 8801041.917	X = 663173.836	Y = 8801045.424	X = 663180.493	Y = 8801084.869	X = 663196.461	Y = 8801081.992	X = 663199.688	Y = 8801077.346		
188	X = 663227.953	Y = 8801035.674	X = 663214.453	Y = 8801074.685	X = 663219.099	Y = 8801077.913	X = 663208.070	Y = 8801039.256	X = 663235.046	Y = 8801075.040		
189	X = 663247.636	Y = 8801032.127	X = 663227.953	Y = 8801035.674	X = 663254.729	Y = 8801071.494	X = 663235.046	Y = 8801075.040				
190	X = 663267.320	Y = 8801028.581	X = 663247.636	Y = 8801032.127	X = 663254.729	Y = 8801071.494	X = 663274.412	Y = 8801067.948				
191	X = 663287.002	Y = 8801025.034	X = 663267.320	Y = 8801028.581	X = 663274.412	Y = 8801067.948	X = 663294.095	Y = 8801064.401				
192	X = 663287.003	Y = 8801025.035	X = 663287.002	Y = 8801025.034	X = 663294.095	Y = 8801064.401	X = 663313.778	Y = 8801060.855				
193	X = 663326.369	Y = 8801017.943	X = 663287.003	Y = 8801025.035	X = 663313.778	Y = 8801060.855	X = 663333.461	Y = 8801057.309				
194	X = 663345.852	Y = 8801014.433	X = 663326.369	Y = 8801017.943	X = 663333.461	Y = 8801057.309	X = 663349.007	Y = 8801054.508	X = 663352.235	Y = 8801049.863		
195	X = 663360.613	Y = 8801011.333	X = 663399.843	Y = 8801004.288	X = 663364.121	Y = 8801031.203	X = 663403.422	Y = 8801024.053				
196	X = 663367.009	Y = 8801047.201	X = 663407.044	Y = 8801044.053	X = 663364.121	Y = 8801031.203	X = 663403.422	Y = 8801024.053	X = 663371.656	Y = 8801050.429		
197	X = 663407.044	Y = 8801044.053	X = 663399.843	Y = 8801004.288	X = 663426.728	Y = 8801040.507	X = 663419.520	Y = 8801000.706				
198	X = 663446.375	Y = 8801036.967	X = 663439.202	Y = 8800997.153	X = 663426.728	Y = 8801040.507	X = 663419.520	Y = 8801000.706				
199	X = 663456.245	Y = 8801050.430	X = 663461.438	Y = 8801054.026	X = 663462.941	Y = 8801053.755	X = 663469.242	Y = 8801088.733	X = 663441.483	Y = 8801053.090		
200	X = 663441.483	Y = 8801053.090	X = 663448.575	Y = 8801092.456	X = 663429.024	Y = 8801095.978	X = 663429.025	Y = 8801095.978				
201	X = 663402.114	Y = 8801060.183	X = 663409.209	Y = 8801099.548	X = 663429.024	Y = 8801095.978	X = 663429.025	Y = 8801095.978				
202	X = 663402.114	Y = 8801060.183	X = 663409.209	Y = 8801099.548	X = 663382.433	Y = 8801063.728	X = 663389.526	Y = 8801103.095				
203	X = 663362.750	Y = 8801067.275	X = 663369.843	Y = 8801106.641	X = 663382.433	Y = 8801063.728	X = 663389.526	Y = 8801103.095				
204	X = 663362.750	Y = 8801067.275	X = 663369.843	Y = 8801106.641	X = 663343.062	Y = 8801070.822	X = 663350.159	Y = 8801110.187				
205	X = 663323.384	Y = 8801074.367	X = 663330.476	Y = 8801113.733	X = 663343.062	Y = 8801070.822	X = 663350.159	Y = 8801110.187				
206	X = 663323.384	Y = 8801074.367	X = 663330.476	Y = 8801113.733	X = 663284.018	Y = 8801081.459	X = 663310.793	Y = 8801117.279				
207	X = 663284.017	Y = 8801081.459	X = 663291.110	Y = 8801120.825	X = 663284.018	Y = 8801081.459	X = 663310.793	Y = 8801117.279				
208	X = 663284.017	Y = 8801081.459	X = 663291.110	Y = 8801120.825	X = 663264.335	Y = 8801085.005	X = 663271.427	Y = 8801124.371				
209	X = 663264.335	Y = 8801085.005	X = 663271.427	Y = 8801124.371	X = 663244.652	Y = 8801088.551	X = 663251.744	Y = 8801127.917				
210	X = 663244.652	Y = 8801088.551	X = 663251.744	Y = 8801127.917	X = 663223.821	Y = 8801092.304	X = 663220.977	Y = 8801096.881	X = 663230.988	Y = 8801131.657		
211	X = 663206.137	Y = 8801099.554	X = 663201.066	Y = 8801096.397	X = 663216.148	Y = 8801134.328	X = 663183.350	Y = 8801099.590	X = 663190.444	Y = 8801138.955		
212	X = 663163.667	Y = 8801103.136	X = 663170.761	Y = 8801142.502	X = 663190.444	Y = 8801138.955	X = 663183.350	Y = 8801099.590				
213	X = 663163.667	Y = 8801103.136	X = 663170.761	Y = 8801142.502	X = 663143.984	Y = 8801106.684	X = 663151.078	Y = 8801146.052				
214	X = 663151.078	Y = 8801146.052	X = 663124.301	Y = 8801110.230	X = 663143.984	Y = 8801106.684	X = 663131.395	Y = 8801149.596				
215	X = 663104.618	Y = 8801113.777	X = 663124.301	Y = 8801110.230	X = 663111.712	Y = 8801153.143	X = 663131.395	Y = 8801149.596				
216	X = 663104.618	Y = 8801113.777	X = 663111.712	Y = 8801153.143	X = 663084.935	Y = 8801117.324	X = 663092.029	Y = 8801156.691				
217	X = 663069.189	Y = 8801120.162	X = 663065.961	Y = 8801124.808	X = 663084.935	Y = 8801117.324	X = 663092.029	Y = 8801156.691	X = 663072.345	Y = 8801160.238		

STAND NO:												
218	X = 662960.835	Y = 8801086.576	X = 662964.045	Y = 8801081.934	X = 663036.581	Y = 8801068.872	X = 663041.227	Y = 8801072.098	X = 663061.581	Y = 8801185.064	X = 663056.790	Y = 8801192.293
218(CONT)	X = 663032.368	Y = 8801188.768	X = 663024.875	Y = 8801179.629	X = 663015.783	Y = 8801172.167	X = 663005.409	Y = 8801166.622	X = 662994.154	Y = 8801163.208	X = 662982.448	Y = 8801162.055
219	X = 662887.108	Y = 8801236.328	X = 662881.187	Y = 8801232.152	X = 662865.534	Y = 8801104.701	X = 662877.468	Y = 8801103.235	X = 662880.538	Y = 8801128.229	X = 662947.727	Y = 8801116.125
219(CONT)	X = 662949.114	Y = 8801172.167	X = 662940.022	Y = 8801179.629	X = 662932.655	Y = 8801188.606	X = 662929.800	Y = 8801193.884	X = 662927.016	Y = 8801199.094	X = 662923.601	Y = 8801210.350
220	X = 662938.338	Y = 8801086.571	X = 662942.984	Y = 8801089.800	X = 662947.727	Y = 8801116.125	X = 662927.511	Y = 8801088.517	X = 662932.964	Y = 8801118.784		
221	X = 662918.202	Y = 8801121.444	X = 662912.748	Y = 8801091.171	X = 662932.964	Y = 8801118.784	X = 662927.511	Y = 8801088.517				
222	X = 662918.202	Y = 8801121.444	X = 662912.748	Y = 8801091.171	X = 662897.985	Y = 8801093.829	X = 662903.440	Y = 8801124.103				
223	X = 662883.223	Y = 8801096.487	X = 662888.639	Y = 8801126.770	X = 662897.985	Y = 8801093.829	X = 662903.440	Y = 8801124.103				
224	X = 662865.534	Y = 8801104.701	X = 662865.480	Y = 8801104.263	X = 662869.371	Y = 8801098.982	X = 662883.223	Y = 8801096.487	X = 662888.678	Y = 8801126.763	X = 662880.538	Y = 8801128.230
225	X = 662798.720	Y = 8801027.886	X = 662837.064	Y = 8801014.565	X = 662801.524	Y = 8801044.687	X = 662840.978	Y = 8801038.102				
226	X = 662804.817	Y = 8801064.414	X = 662844.271	Y = 8801057.829	X = 662801.524	Y = 8801044.687	X = 662840.978	Y = 8801038.102				
227	X = 662804.817	Y = 8801064.414	X = 662844.271	Y = 8801057.829	X = 662807.971	Y = 8801084.397	X = 662847.677	Y = 8801079.560				
228	X = 662810.389	Y = 8801104.250	X = 662850.096	Y = 8801099.413	X = 662807.971	Y = 8801084.397	X = 662847.677	Y = 8801079.560				
229	X = 662810.389	Y = 8801104.250	X = 662850.096	Y = 8801099.413	X = 662812.808	Y = 8801124.103	X = 662852.514	Y = 8801119.266				
230	X = 662815.226	Y = 8801143.956	X = 662854.933	Y = 8801139.120	X = 662812.808	Y = 8801124.103	X = 662852.514	Y = 8801119.266				
231	X = 662815.226	Y = 8801143.956	X = 662854.933	Y = 8801139.120	X = 662817.645	Y = 8801163.810	X = 662857.351	Y = 8801158.973				
232	X = 662820.063	Y = 8801183.663	X = 662859.769	Y = 8801178.826	X = 662817.645	Y = 8801163.810	X = 662857.351	Y = 8801158.973				
233	X = 662820.063	Y = 8801183.663	X = 662859.769	Y = 8801178.826	X = 662822.481	Y = 8801203.516	X = 662862.188	Y = 8801198.679				
234	X = 662824.900	Y = 8801223.369	X = 662864.606	Y = 8801218.533	X = 662822.481	Y = 8801203.516	X = 662862.188	Y = 8801198.679				
237	X = 662832.849	Y = 8801302.044	X = 662872.673	Y = 8801298.289	X = 662830.972	Y = 8801282.132	X = 662872.673	Y = 8801298.289				
238	X = 662832.849	Y = 8801302.044	X = 662872.673	Y = 8801298.289	X = 662834.009	Y = 8801322.011	X = 662874.000	Y = 8801321.189				
239	X = 662834.420	Y = 8801342.006	X = 662874.411	Y = 8801341.185	X = 662834.009	Y = 8801322.011	X = 662874.000	Y = 8801321.189				
240	X = 662834.420	Y = 8801342.006	X = 662874.411	Y = 8801341.185	X = 662834.830	Y = 8801362.002	X = 662874.822	Y = 8801361.181				
241	X = 662835.241	Y = 8801381.998	X = 662875.232	Y = 8801381.176	X = 662834.830	Y = 8801362.002	X = 662874.822	Y = 8801361.181				
242	X = 662835.241	Y = 8801381.998	X = 662875.232	Y = 8801381.176	X = 662835.652	Y = 8801401.994	X = 662875.643	Y = 8801401.172				
243	X = 662890.252	Y = 8801394.274	X = 662884.129	Y = 8801256.508	X = 662887.827	Y = 8801251.554	X = 662923.843	Y = 8801243.274	X = 662928.507	Y = 8801246.309	X = 662934.569	Y = 8801257.664
244	X = 662955.460	Y = 8801277.128	X = 662990.204	Y = 8801283.966	X = 663027.047	Y = 8801339.962	X = 663025.510	Y = 8801344.876	X = 662894.317	Y = 8801396.964	X = 662890.252	Y = 8801394.274
245	X = 663008.661	Y = 8801280.823	X = 663010.189	Y = 8801274.933	X = 663015.783	Y = 8801271.943	X = 663024.875	Y = 8801264.482	X = 663032.337	Y = 8801255.389	X = 663037.881	Y = 8801245.016
245	X = 663047.352	Y = 8801214.946	X = 663221.030	Y = 8801175.498	X = 663228.404	Y = 8801179.976	X = 663247.493	Y = 8801252.937	X = 663244.766	Y = 8801258.317	X = 663049.519	Y = 8801335.771
246	X = 663296.306	Y = 8801160.959	X = 663489.696	Y = 8801126.283	X = 663484.677	Y = 8801231.507	X = 663476.174	Y = 8801249.098	X = 663411.260	Y = 8801217.720	X = 663354.888	Y = 8801214.753
247	X = 663489.696	Y = 8801126.283	X = 663596.867	Y = 8801146.675	X = 663591.039	Y = 8801365.680	X = 663567.316	Y = 8801371.614	X = 663469.623	Y = 8801306.229	X = 663452.442	Y = 8801297.852
248	X = 663596.867	Y = 8801146.675	X = 663733.304	Y = 8801147.871	X = 663733.304	Y = 8801365.110	X = 663675.762	Y = 8801424.284	X = 663637.197	Y = 8801428.915	X = 663567.316	Y = 8801371.614
249	X = 663452.442	Y = 8801297.852	X = 663469.579	Y = 8801262.581	X = 663451.505	Y = 8801254.183	X = 663434.602	Y = 8801289.153				
250	X = 663416.655	Y = 8801280.328	X = 663416.626	Y = 8801280.388	X = 663451.505	Y = 8801254.183	X = 663434.602	Y = 8801289.153				
251	X = 663416.655	Y = 8801280.328	X = 663416.626	Y = 8801280.388	X = 663398.648	Y = 8801271.621	X = 663398.649	Y = 8801271.622				
252	X = 663388.973	Y = 8801231.683	X = 663381.408	Y = 8801263.216	X = 663398.648	Y = 8801271.621	X = 663398.649	Y = 8801271.622				
253	X = 663388.973	Y = 8801231.683	X = 663381.408	Y = 8801263.216	X = 663356.936	Y = 8801232.813	X = 663367.141	Y = 8801268.697				
254	X = 663333.827	Y = 8801238.874	X = 663348.535	Y = 8801276.055	X = 663356.936	Y = 8801232.813	X = 663367.141	Y = 8801268.697				
255	X = 663315.246	Y = 8801246.274	X = 663348.535	Y = 8801276.055	X = 663333.827	Y = 8801238.874	X = 663329.937	Y = 8801283.410				
256	X = 663315.246	Y = 8801246.274	X = 663311.371	Y = 8801290.848	X = 663329.937	Y = 8801283.410	X = 663311.361	Y = 8801290.822				
257	X = 663278.034	Y = 8801260.945	X = 663311.371	Y = 8801290.848	X = 663292.773	Y = 8801298.205	X = 663311.361	Y = 8801290.822				
258	X = 663223.031	Y = 8801282.717	X = 663204.438	Y = 8801290.085	X = 663219.170	Y = 8801327.250	X = 663237.765	Y = 8801319.887				
259	X = 663185.844	Y = 8801297.453	X = 663204.438	Y = 8801290.085	X = 663219.170	Y = 8801327.250	X = 663200.594	Y = 8801334.663				
260	X = 663185.844	Y = 8801297.453	X = 663167.251	Y = 8801304.821	X = 663181.988	Y = 8801341.997	X = 663200.594	Y = 8801334.663				
261	X = 663148.658	Y = 8801312.189	X = 663167.251	Y = 8801304.821	X = 663181.988	Y = 8801341.997	X = 663163.395	Y = 8801349.368				
262	X = 663148.658	Y = 8801312.189	X = 663130.064	Y = 8801319.557	X = 663144.804	Y = 8801356.737	X = 663163.395	Y = 8801349.368				
263	X = 663130.064	Y = 8801319.557	X = 663111.471	Y = 8801326.925	X = 663144.804	Y = 8801356.737	X = 663126.210	Y = 8801364.108				
264	X = 663082.542	Y = 8801338.390	X = 663111.471	Y = 8801326.925	X = 663102.450	Y = 8801373.526	X = 663126.210	Y = 8801364.108				
265	X = 663024.910	Y = 8801361.199	X = 662998.653	Y = 8801371.587	X = 663013.368	Y = 8801408.782	X = 663046.844	Y = 8801395.538				
266	X = 662980.056	Y = 8801378.944	X = 662998.653	Y = 8801371.587	X = 663013.368	Y = 8801408.782	X = 662994.771	Y = 8801416.139				
267	X = 662980.056	Y = 8801378.944	X = 662961.458	Y = 8801386.301	X = 662976.173	Y = 8801423.496	X = 662994.771	Y = 8801416.139				
268	X = 662944.152	Y = 8801393.148	X = 662961.458	Y = 8801386.301	X = 662976.173	Y = 8801423.496	X = 662942.037	Y = 8801398.294	X = 662956.471	Y = 8801431.306		
269	X = 662894.394	Y = 8801498.921	X = 662888.495	Y = 8801494.804	X = 662890.381	Y = 8801418.767	X = 662894.529	Y = 8801412.822	X = 662922.763	Y = 8801401.641	X = 662928.115	Y = 8801403.824
270	X = 662835.652	Y = 8801401.994	X = 662875.643	Y = 8801401.172	X = 662836.062	Y = 8801421.989	X = 662876.054	Y = 8801421.168				
271	X = 662835.340	Y = 8801440.488	X = 662876.054	Y = 8801421.168	X = 662836.062	Y = 8801421.989	X = 662876.054	Y = 8801421.168				
272	X = 662835.340	Y = 8801440.488	X = 662876.054	Y = 8801421.168	X = 662833.995	Y = 8801460.443	X = 662873.932	Y = 8801462.952				
273	X = 662832.649	Y = 8801480.398	X = 662872.592	Y = 8801482.908	X = 662833.995	Y = 8801460.443	X = 662873.932	Y = 8801462.952				
274	X = 662832.649	Y = 8801480.398	X = 662872.592	Y = 8801482.908	X = 662831.303	Y = 8801500.356	X = 662871.254	Y = 8801502.863				
275	X = 662976.173	Y = 8801423.496	X = 662956.471	Y = 8801431.306	X = 662970.904	Y = 8801464.319	X = 662976.230	Y = 8801466.512	X = 662990.888	Y = 8801460.692		
276	X = 662994.771	Y = 8801416.139	X = 662976.173	Y = 8801423.496	X = 662990.888	Y = 8801460.692	X = 663009.490	Y = 8801453.346				
277	X = 663013.368	Y = 8801408.782	X = 662994.771	Y = 8801416.139	X = 663009.490	Y = 8801453.346	X = 663028.086	Y = 8801445.985				
278	X = 663013.368	Y = 8801408.782	X = 663028.086	Y = 8801445.985	X = 663031.966	Y = 8801401.424	X = 663046.682	Y = 8801438.624				
279	X = 663046.844	Y = 8801395.538	X = 663031.966	Y = 8801401.424	X = 663046.682	Y = 8801438.624	X = 663068.777	Y = 8801429.878				
280	X = 663126.210	Y = 8801364.108	X = 663102.450	Y = 8801373.526	X = 663122.358	Y = 8801408.663	X = 663140.951	Y = 8801401.294				
281	X = 663144.804	Y = 8801356.737	X = 663126.210	Y = 8801364.108	X = 663140.951	Y = 8801401.294	X = 663159.543	Y = 8801393.923				
282	X = 663163.395	Y = 8801349.368	X = 663144.804	Y = 8801356.737	X = 663159.543	Y = 8801393.923	X = 663178.135	Y = 8801386.553				
283	X = 663181.988	Y = 8801341.997	X = 663163.395	Y = 8801349.368	X = 663178.135	Y = 8801386.553	X = 663196.728	Y = 8801379.183				
284	X = 663200.594	Y = 8801334.663	X = 663181.988	Y = 8801341.997	X = 663215.320	Y = 8801371.812	X = 663196.728	Y = 8801379.183				

NOTES

REFERENCE DRAWINGS:

SITE SETTING OUT LAYOUT
C00290-00-TP-DAL-0001-001

SITE SETTING OUT CO ORDINATE

C00290-00-TP-DAL-0013-001
C00290-00-TP-DAL-0013-003
C00290-00-TP-DAL-0013-004
C00290-00-TP-DAL-0013-005

ISSUED FOR CONSTRUCTION

WorleyParsons RSA retains the copyright in all intellectual property, including designs and/or documents prepared in terms of this appointment for the project covered by the appointment. The client may use the designs and/or documents for the sole purpose of their intended use on this project only subject to payment for the design having been received. Use for any other purpose, whether or not the design and/or documents have been paid for constitutes an infringement of copyright, and all rights are reserved.

All dimensions must be verified on site before the works commence. Refer any discrepancies to the Engineer.

Copyright reserved

REVISIONS

NO.	DATE	CHECKED	DONE BY	DESCRIPTION
A	16/10/15		RJ	ISSUED FOR INTERNAL REVIEW
B	17/10/15		AR	ISSUED FOR DETAIL DESIGN
C	18/10/15		AR	ISSUED FOR SQUAD CHECK
D	23/10/15		AR	ISSUEDFOR CLIENT REVIEW
E	25/11/15		CT	ISSUED FOR CLIENT APPROVAL
0	7/12/2015		CT	ISSUED FOR CONSTRUCTION

WorleyParsons
resources & energy

39 MELROSE BOULEVARD, MELROSE ARCH, JOHANNESBURG
P.O. Box 61232, MARSHALLTOWN, 2107
TEL: +27 (0)11 218 3000
FAX: +27(0)11 218 3100
www.worleyparsons.com
WorleyParsons RSA (Pty) Ltd.

	NAME	SIGNATURE	DATE
DRAWN BY:	R J		15/10/2015
CHECKED:	L. PADAYACHEE		15/10/15
DESIGNER:	R.van SCHALKWYK		15/10/15
PR ENG:	D.du TOIT		15/10/15
PROJECT ENG MANAGER:	L. PADAYACHEE		15/10/15
LOCAL PR ENG:			
CLIENT:			

CLIENT

MOZAMBIQUE GAS DEVELOPMENT PROJECT

Anadarko
Moçambique Área 1, Lda

PROJECT
AMA 1
RESETTLEMENT
VILLAGE

DRAWING DESCRIPTION
RESETTLEMENT VILLAGE
SITE SETTING OUT
CO-ORDINATE LIST

SHEET 2 OF 5

SCALE	DATE
ORIGINAL DWG SIZE A1	DECEMBER 2015

DRAWING NUMBER	REV NO
C00290-00-TP-DAL-0013-002	0

ANADARKO DRAWING NUMBER
EA-MZ-CI0000-WOR-E04-00059-02

STAND NO:							
1	X = 662750.230 Y = 8800714.295	X = 662759.690 Y = 8800731.917	X = 662795.045 Y = 8800713.208	X = 662785.587 Y = 8800695.588			
2	X = 662759.690 Y = 8800731.917	X = 662769.202 Y = 8800749.511	X = 662804.505 Y = 8800730.831	X = 662795.045 Y = 8800713.208			
3	X = 662769.202 Y = 8800749.511	X = 662778.622 Y = 8800767.154	X = 662813.965 Y = 8800748.453	X = 662804.505 Y = 8800730.831			
4	X = 662778.622 Y = 8800767.154	X = 662789.535 Y = 8800787.515	X = 662821.897 Y = 8800771.688	X = 662823.600 Y = 8800766.402	X = 662813.965 Y = 8800748.453		
5	X = 662743.253 Y = 8800785.870	X = 662751.683 Y = 8800801.574	X = 662757.172 Y = 8800803.342	X = 662789.535 Y = 8800787.515	X = 662778.622 Y = 8800767.154		
6	X = 662733.793 Y = 8800768.248	X = 662743.253 Y = 8800785.870	X = 662778.622 Y = 8800767.154	X = 662769.149 Y = 8800749.539			
7	X = 662724.333 Y = 8800750.626	X = 662733.793 Y = 8800768.248	X = 662769.149 Y = 8800749.539	X = 662759.690 Y = 8800731.917			
8	X = 662720.671 Y = 8800744.650	X = 662721.124 Y = 8800744.647	X = 662724.333 Y = 8800750.626	X = 662759.690 Y = 8800731.917	X = 662745.049 Y = 8800704.644	X = 662720.674 Y = 8800704.650	
9	X = 662700.674 Y = 8800744.650	X = 662720.671 Y = 8800744.650	X = 662720.674 Y = 8800704.650	X = 662700.674 Y = 8800704.650			
10	X = 662680.674 Y = 8800744.650	X = 662700.671 Y = 8800744.650	X = 662700.671 Y = 8800704.644	X = 662680.674 Y = 8800704.644			
11	X = 662660.674 Y = 8800744.650	X = 662680.674 Y = 8800744.650	X = 662680.674 Y = 8800704.650	X = 662660.674 Y = 8800704.650			
12	X = 662640.674 Y = 8800744.650	X = 662660.674 Y = 8800744.650	X = 662660.674 Y = 8800704.650	X = 662640.674 Y = 8800704.650			
13	X = 662620.674 Y = 8800744.650	X = 662640.674 Y = 8800744.650	X = 662640.674 Y = 8800704.650	X = 662620.674 Y = 8800704.650			
14	X = 662600.674 Y = 8800744.650	X = 662620.674 Y = 8800744.650	X = 662620.674 Y = 8800704.650	X = 662600.674 Y = 8800704.650			
15	X = 662615.231 Y = 8800799.720	X = 662635.430 Y = 8800799.720	X = 662635.430 Y = 8800759.674	X = 662619.231 Y = 8800759.679	X = 662615.231 Y = 8800763.680		
16	X = 662635.430 Y = 8800799.720	X = 662655.493 Y = 8800799.719	X = 662655.493 Y = 8800759.668	X = 662635.430 Y = 8800759.674			
17	X = 662655.493 Y = 8800799.719	X = 662675.493 Y = 8800799.720	X = 662675.493 Y = 8800759.662	X = 662655.493 Y = 8800759.668			
18	X = 662675.493 Y = 8800799.720	X = 662688.492 Y = 8800799.720	X = 662710.922 Y = 8800761.633	X = 662745.049 Y = 8800704.644	X = 662675.493 Y = 8800759.662		
19	X = 662688.492 Y = 8800799.720	X = 662693.952 Y = 8800810.883	X = 662730.152 Y = 8800793.180	X = 662714.305 Y = 8800763.658	X = 662710.922 Y = 8800761.633		
20	X = 662693.952 Y = 8800810.883	X = 662703.178 Y = 8800829.748	X = 662736.495 Y = 8800813.454	X = 662738.198 Y = 8800808.169	X = 662730.152 Y = 8800793.180		
21	X = 662666.236 Y = 8800839.643	X = 662667.845 Y = 8800842.595	X = 662673.333 Y = 8800844.344	X = 662703.178 Y = 8800829.748	X = 662688.492 Y = 8800799.719	X = 662685.268 Y = 8800799.720	
22	X = 662655.495 Y = 8800839.644	X = 662666.236 Y = 8800839.643	X = 662685.268 Y = 8800799.720	X = 662655.495 Y = 8800799.720			
23	X = 662635.430 Y = 8800839.644	X = 662655.495 Y = 8800839.644	X = 662655.495 Y = 8800799.720	X = 662635.430 Y = 8800799.720			
24	X = 662615.231 Y = 8800835.644	X = 662619.231 Y = 8800839.644	X = 662635.430 Y = 8800839.644	X = 662635.430 Y = 8800799.720	X = 662615.231 Y = 8800799.720		
25	X = 662560.215 Y = 8800744.645	X = 662560.215 Y = 8800764.645	X = 662600.215 Y = 8800764.645	X = 662600.215 Y = 8800744.645			
26	X = 662560.215 Y = 8800764.645	X = 662560.215 Y = 8800784.645	X = 662600.215 Y = 8800784.645	X = 662600.215 Y = 8800764.645			
27	X = 662560.215 Y = 8800784.645	X = 662560.215 Y = 8800804.645	X = 662600.215 Y = 8800804.645	X = 662600.215 Y = 8800784.645			
28	X = 662560.215 Y = 8800804.645	X = 662560.215 Y = 8800824.645	X = 662600.215 Y = 8800824.645	X = 662600.215 Y = 8800804.645			
29	X = 662560.215 Y = 8800824.645	X = 662560.215 Y = 8800844.645	X = 662600.215 Y = 8800844.645	X = 662600.215 Y = 8800824.645			
30	X = 662600.231 Y = 8800894.807	X = 662620.231 Y = 8800894.807	X = 662620.231 Y = 8800854.679	X = 662600.231 Y = 8800854.679			
31	X = 662620.231 Y = 8800894.807	X = 662633.440 Y = 8800894.807	X = 662657.036 Y = 8800854.662	X = 662620.232 Y = 8800854.679			
32	X = 662633.439 Y = 8800894.810	X = 662637.441 Y = 8800902.098	X = 662672.507 Y = 8800882.853	X = 662657.045 Y = 8800854.679			
33	X = 662637.441 Y = 8800902.098	X = 662647.064 Y = 8800919.631	X = 662682.130 Y = 8800900.386	X = 662672.507 Y = 8800882.853			
34	X = 662647.064 Y = 8800919.631	X = 662656.687 Y = 8800937.164	X = 662691.752 Y = 8800917.919	X = 662682.130 Y = 8800900.386			
35	X = 662656.687 Y = 8800937.164	X = 662666.309 Y = 8800954.697	X = 662701.375 Y = 8800935.452	X = 662691.752 Y = 8800917.919			
36	X = 662666.309 Y = 8800954.697	X = 662675.931 Y = 8800972.230	X = 662710.997 Y = 8800952.986	X = 662701.375 Y = 8800935.452			
37	X = 662675.931 Y = 8800972.230	X = 662685.553 Y = 8800989.764	X = 662720.620 Y = 8800970.519	X = 662710.997 Y = 8800952.986			
38	X = 662685.553 Y = 8800989.764	X = 662695.176 Y = 8801007.297	X = 662730.242 Y = 8800988.052	X = 662720.620 Y = 8800970.519			
39	X = 662742.612 Y = 8801047.381	X = 662761.502 Y = 8801040.818	X = 662748.469 Y = 8801003.001	X = 662729.577 Y = 8801009.564			
40	X = 662761.502 Y = 8801040.818	X = 662780.396 Y = 8801034.254	X = 662767.362 Y = 8800996.437	X = 662748.469 Y = 8801003.001			
41	X = 662780.396 Y = 8801034.254	X = 662799.287 Y = 8801027.689	X = 662786.253 Y = 8800989.873	X = 662767.362 Y = 8800996.437			
42	X = 662799.287 Y = 8801027.689	X = 662786.253 Y = 8800989.873	X = 662786.253 Y = 8800989.873	X = 662786.253 Y = 8800989.873			
43	X = 662786.253 Y = 8800989.873	X = 662837.064 Y = 8801014.565	X = 662827.268 Y = 8800979.722	X = 662822.562 Y = 8800977.258	X = 662786.253 Y = 8800989.873		
44	X = 662773.224 Y = 8800955.000	X = 662783.942 Y = 8800974.797	X = 662816.836 Y = 8800963.368	X = 662818.469 Y = 8800957.704	X = 662818.469 Y = 8800957.704		
45	X = 662729.117 Y = 8800954.543	X = 662739.381 Y = 8800973.320	X = 662773.224 Y = 8800955.000	X = 662763.037 Y = 8800936.180			
46	X = 662718.853 Y = 8800935.765	X = 662729.117 Y = 8800954.543	X = 662763.037 Y = 8800936.180	X = 662752.849 Y = 8800917.361			
47	X = 662708.588 Y = 8800916.987	X = 662718.853 Y = 8800935.765	X = 662752.849 Y = 8800917.361	X = 662742.661 Y = 8800898.542			
48	X = 662698.324 Y = 8800898.209	X = 662708.588 Y = 8800916.987	X = 662742.661 Y = 8800898.542	X = 662698.324 Y = 8800898.209			
49	X = 662698.324 Y = 8800898.209	X = 662698.324 Y = 8800898.209	X = 662698.324 Y = 8800898.209	X = 662698.324 Y = 8800898.209			
50	X = 662680.616 Y = 8800857.480	X = 662678.943 Y = 8800862.751	X = 662698.324 Y = 8800898.209	X = 662698.324 Y = 8800898.209	X = 662712.105 Y = 8800842.080		
51	X = 662712.098 Y = 8800842.083	X = 662722.349 Y = 8800861.019	X = 662756.612 Y = 8800842.471	X = 662749.084 Y = 8800828.448	X = 662743.595 Y = 8800826.680		
52	X = 662722.349 Y = 8800861.019	X = 662732.474 Y = 8800879.723	X = 662766.671 Y = 8800861.210	X = 662756.612 Y = 8800842.471			
53	X = 662732.474 Y = 8800879.723	X = 662742.661 Y = 8800898.542	X = 662776.793 Y = 8800880.065	X = 662766.671 Y = 8800861.210			
54	X = 662742.661 Y = 8800898.542	X = 662752.849 Y = 8800917.361	X = 662786.914 Y = 8800898.921	X = 662776.793 Y = 8800880.065			
55	X = 662752.849 Y = 8800917.361	X = 662763.036 Y = 8800936.180	X = 662797.036 Y = 8800917.776	X = 662786.914 Y = 8800898.921			
56	X = 662763.036 Y = 8800936.180	X = 662773.224 Y = 8800955.000	X = 662807.157 Y = 8800936.631	X = 662797.036 Y = 8800917.776			
57	X = 662845.820 Y = 8800969.138	X = 662841.520 Y = 8800974.734	X = 662846.149 Y = 8800991.683	X = 662883.429 Y = 8800984.743	X = 662879.067 Y = 8800961.340		
58	X = 662846.149 Y = 8800991.683	X = 662851.762 Y = 8801014.847	X = 662887.785 Y = 8801008.141	X = 662883.429 Y = 8800984.743			
59	X = 662851.762 Y = 8801014.847	X = 662856.595 Y = 8801038.157	X = 662892.142 Y = 8801031.538	X = 662887.785 Y = 8801008.141			
60	X = 662856.595 Y = 8801038.157	X = 662860.651 Y = 8801061.610	X = 662896.498 Y = 8801054.936	X = 662892.142 Y = 8801031.538			
61	X = 662860.651 Y = 8801061.610	X = 662896.498 Y = 8801054.936	X = 662867.279 Y = 8801084.117	X = 662900.808 Y = 8801078.085	X = 662896.498 Y = 8801054.936		
62	X = 662896.498 Y = 8801054.936	X = 662900.808 Y = 8801078.085	X = 662938.697 Y = 8801071.269	X = 662938.697 Y = 8801071.269	X = 662938.303 Y = 8801047.153		
63	X = 662892.142 Y = 8801031.538	X = 662896.498 Y = 8801054.936	X = 662938.303 Y = 8801047.153	X = 662933.982 Y = 8801023.748			
64	X = 662887.785 Y = 8801008.141	X = 662892.142 Y = 8801031.538	X = 662933.982 Y = 8801023.748	X = 662887.785 Y = 8801008.141			
65	X = 662887.785 Y = 8801008.141	X = 662887.785 Y = 8801008.141	X = 662887.785 Y = 8801008.141	X = 662925.341 Y = 8800976.939			
66	X = 662879.073 Y = 8800961.344	X = 662887.785 Y = 8801008.141	X = 662925.341 Y = 8800976.939	X = 662921.787 Y = 8800957.672	X = 662917.122 Y = 8800954.472		
67	X = 662827.506 Y = 8800942.823	X = 662832.888 Y = 8800952.849	X = 662838.378 Y = 8800955.174	X = 662875.284 Y = 8800946.427	X = 662863.343 Y = 8800923.860		
68	X = 662863.343 Y = 8800923.860	X = 662827.506 Y = 8800942.823	X = 662863.343 Y = 8800923.860	X = 662853.989 Y = 8800906.183			
69	X = 662808.588 Y = 8800907.579	X = 662863.343 Y = 8800923.860	X = 662853.989 Y = 8800906.183	X = 662844.634 Y = 8800888.505			
70	X = 662789.669 Y = 8800872.335	X = 662808.588 Y = 8800907.579	X = 662844.634 Y = 8800888.505	X = 662835.280 Y = 8800870.827			
71	X = 662789.669 Y = 8800872.335	X = 662789.669 Y = 8800872.335	X = 662835.280 Y = 8800870.827	X = 662825.926 Y = 8800853.150			
72	X = 662825.926 Y = 8800853.150	X = 662789.669 Y = 8800872.335	X = 662825.926 Y = 8800853.150	X = 662816.572 Y = 8800835.472			
73	X = 662770.751 Y = 8800837.091	X = 662825.926 Y = 8800853.150	X = 662816.572 Y = 8800835.472	X = 662770.751 Y = 8800837.091			
74	X = 662764.269 Y = 8800816.563	X = 662764.269 Y = 8800816.563	X = 662770.751 Y = 8800837.091	X = 662770.751 Y = 8800837.091	X = 662797.872 Y = 8800800.133		
75	X = 662797.872 Y = 8800800.133	X = 662807.218 Y = 8800817.795	X = 662844.883 Y = 8800797.864	X = 662838.045 Y = 8800784.941	X = 662832.578 Y = 8800783.162		
76	X = 662807.218 Y = 8800817.795	X = 662816.572 Y = 8800835.472	X = 662854.237 Y = 8800815.542	X = 662844.883 Y = 8800797.864			
77	X = 662816.572 Y = 8800835.472	X = 662825.926 Y = 8800853.150	X = 662863.591 Y = 8800833.220	X = 662854.237 Y = 8800815.542			
78	X = 662825.926 Y = 8800853.150	X = 662835.280 Y = 8800870.828	X = 662872.947 Y = 8800850.897	X = 662863.591 Y = 8800833.220			
79	X = 662835.280 Y = 8800870.828	X = 662844.635 Y = 8800888.505	X = 662844.635 Y = 8800888.505	X = 662872.947 Y = 8800850.897			

STAND NO:							
80	X = 662844.635 Y = 8800888.506	X = 662853.989 Y = 8800906.183	X = 662891.654 Y = 8800886.252	X = 662882.257 Y = 8800868.598			
81	X = 662853.989 Y = 8800906.183	X = 662863.343 Y = 8800923.860	X = 662901.008 Y = 8800903.930	X = 662891.654 Y = 8800886.252			
82	X = 662863.343 Y = 8800923.860	X = 662875.284 Y = 8800946.427	X = 662913.298 Y = 8800939.985	X = 662916.572 Y = 8800933.344	X = 662901.008 Y = 8800903.930		
83	X = 662916.572 Y = 8800933.344	X = 662936.900 Y = 8800957.006	X = 662939.443 Y = 8800970.771	X = 662979.817 Y = 8800963.501	X = 662976.192 Y = 8800943.858		
84	X = 662939.443 Y = 8800970.771	X = 662943.007 Y = 8800990.060	X = 662983.376 Y = 8800982.791	X = 662979.817 Y = 8800963.501			
85	X = 662943.007 Y = 8800990.060	X = 662946.586 Y = 8801009.434	X = 662986.954 Y = 8801002.161	X = 662983.376 Y = 8800982.791			
86	X = 662946.586 Y = 8801009.434	X = 662950.178 Y = 8801028.864	X = 662990.540 Y = 8801021.592	X = 662986.954 Y = 8801002.161			
87	X = 662950.178 Y = 8801028.864	X = 662953.753 Y = 8801048.230	X = 662994.117 Y = 8801040.958	X = 662990.540 Y = 8801021.592			
88	X = 662953.753 Y = 8801048.230	X = 662994.117 Y = 8801040.958	X = 662961.322 Y = 8801067.183	X = 662997.744 Y = 8801060.624	X = 662994.117 Y = 8801040.958		
89	X = 662994.117 Y = 8801040.958	X = 662997.744 Y = 8801060.624	X = 662994.117 Y = 8801040.958	X = 663037.149 Y = 8801049.463	X = 663037.149 Y = 8801049.463		
90	X = 663037.149 Y = 8801049.463	X = 662994.117 Y = 8801040.958	X = 663037.149 Y = 8801049.463	X = 663030.823 Y = 8801014.335			
91	X = 662986.968 Y = 8801002.241	X = 663037.149 Y = 8801049.463	X = 663030.823 Y = 8801014.335	X = 663027.321 Y = 8800994.888			
92	X = 662986.968 Y = 8801002.241	X = 662986.968 Y = 8801002.241	X = 663027.321 Y = 8800994.888	X = 663023.833 Y = 8800975.516			
93	X = 662927.870 Y = 8800922.625	X = 662927.870 Y = 8800922.625	X = 662941.148 Y = 8800934.890	X = 662974.326 Y = 8800928.912	X = 662974.326 Y = 8800928.912	X = 662963.225 Y = 8800903.917	
94	X = 662918.516 Y = 8800904.947	X = 662927.870 Y = 8800922.625	X = 662963.225 Y = 8800903.917	X = 662953.872 Y = 8800886.239			
95	X = 662909.162 Y = 8800887.269	X = 662918.516 Y = 8800904.947	X = 662953.872 Y = 8800886.239	X = 662944.539 Y = 8800868.550			
96	X = 662944.539 Y = 8800868.550	X = 662909.162 Y = 8800887.269	X = 662944.539 Y = 8800868.550	X = 662944.539 Y = 8800868.550			
97	X = 662890.454 Y = 8800851.914	X = 662944.539 Y = 8800868.550	X = 662944.539 Y = 8800868.550	X = 662925.809 Y = 8800833.206			
98	X = 662881.100 Y = 8800834.236	X = 662890.454 Y = 8800851.914	X = 662925.809 Y = 8800833.206	X = 662916.476 Y = 8800815.517			
99	X = 662916.476 Y = 8800815.517	X = 662881.100 Y = 8800834.236	X = 662916.476 Y = 8800815.517	X = 662907.101 Y = 8800797.851			
100	X = 662862.392 Y = 8800798.881	X = 662916.476 Y = 8800815.517	X = 662907.101 Y = 8800797.851	X = 662862.392 Y = 8800798.881			
101	X = 662862.392 Y = 8800798.881	X = 662852.418 Y = 8800780.031	X = 662862.392 Y = 8800798.881	X = 662862.392 Y = 8800798.881			
102	X = 662830.733 Y = 8800722.838	X = 662839.828 Y = 8800756.240	X = 662848.029 Y = 8800758.908	X = 662864.286 Y = 8800750.955	X = 662864.286 Y = 8800750.955		
103	X = 662864.286 Y = 8800750.955	X = 662864.286 Y = 8800750.955	X = 662882.253 Y = 8800742.171	X = 662864.570 Y = 8800706.203			
104	X = 662864.570 Y = 8800706.203	X = 662882.253 Y = 8800742.171	X = 662900.220 Y = 8800733.384	X = 662900.220 Y = 8800733.384			
105	X = 662900.220 Y = 8800733.384	X = 662900.220 Y = 8800733.384	X = 662918.184 Y = 8800724.595	X = 662900.468 Y = 8800688.555			
106	X = 662900.468 Y = 8800688.555	X = 662918.184 Y = 8800724.595	X = 662928.120 Y = 8800719.739	X = 662928.120 Y = 8800719.739	X = 662928.120 Y = 8800719.739		
107	X = 662885.608 Y = 8800757.232	X = 662897.749 Y = 8800780.175	X = 662933.103 Y = 8800761.465	X = 662923.429 Y = 8800743.184	X = 662917.965 Y = 8800741.409		
108	X = 662897.749 Y = 8800780.175	X = 662907.101 Y = 8800797.850	X = 662942.457 Y = 8800779.142	X = 662933.103 Y = 8800761.465			
109	X = 662907.101 Y = 8800797.850	X = 662916.476 Y = 8800815.517	X = 662951.811 Y = 8800796.820	X = 662942.457 Y = 8800779.142			
110	X = 662916.476 Y = 8800815.517	X = 662925.809 Y = 8800833.206	X = 662961.165 Y = 8800814.498	X = 662951.811 Y = 8800796.820			
111	X = 662925.809 Y = 8800833.206	X = 662961.165 Y = 8800814.498	X = 662970.519 Y = 8800832.175	X = 662961.165 Y = 8800814.498			
112	X = 662961.165 Y = 8800814.498	X = 662944.518 Y = 8800868.561	X = 662979.873 Y = 8800849.853	X = 662970.519 Y = 8800832.175			
113	X = 662944.518 Y = 8800868.561	X = 662979.873 Y = 8800849.853	X = 662989.227 Y = 8800867.531	X = 662979.873 Y = 8800849.853			
114	X = 662979.873 Y = 8800849.853	X = 662963.245 Y = 8800903.954	X = 662963.245 Y = 8800903.954	X = 662989.227 Y = 8800867.531			
115	X = 662926.111 Y = 8800715.929	X = 662935.447 Y = 8800733.617	X = 662970.812 Y = 8800714.927	X = 662961.474 Y = 8800697.240			
116	X = 662935.447 Y = 8800733.617	X = 662961.474 Y = 8800697.240	X = 662980.149 Y = 8800732.613	X = 662970.812 Y = 8800714.927			
117	X = 662961.474 Y = 8800697.240	X = 662954.121 Y = 8800768.990	X = 662989.486 Y = 8800750.300	X = 662980.149 Y = 8800732.613			
118	X = 662954.121 Y = 8800768.990	X = 662989.486 Y = 8800750.300	X = 662989.486 Y = 8800750.300	X = 662989.486 Y = 8800750.300			
119	X = 662989.486 Y = 8800750.300	X = 662972.804 Y = 8800804.359	X = 662972.804 Y = 8800804.359	X = 662989.486 Y = 8800750.300			
120	X = 662972.804 Y = 8800804.359	X = 662984.497 Y = 8800826.527	X = 662984.497 Y = 8800826.527	X = 662984.497 Y = 8800826.527	X = 662984.497 Y = 8800826.527	X = 662972.804 Y = 8800804.359	
121	X = 662984.497 Y = 8800826.527	X = 662984.497 Y = 8800826.527	X = 662984.497 Y = 8800826.527	X = 662984.497 Y = 8800826.527			
122	X = 662984.497 Y = 8800826.527	X = 662984.497 Y = 8800826.527	X = 663057.282 Y = 8800817.478	X = 663050.190 Y = 8800778.111			
123	X = 663050.190 Y = 8800778.111	X = 663057.282 Y = 8800817.478	X = 663076.965 Y = 8800813.931	X = 663076.965 Y = 8800813.931			
124	X = 663076.965 Y = 8800813.931	X = 663076.965 Y = 8800813.931	X = 663076.965 Y = 8800813.931	X = 663089.556 Y = 8800771.020			
125	X = 663089.556 Y = 8800771.020	X = 663076.965 Y = 8800813.931	X = 663116.331 Y = 8800806.839	X = 663109.239 Y = 8800767.473			
126	X = 663109.239 Y = 8800767.473	X = 663109.239 Y = 8800767.473	X = 663109.239 Y = 8800767.473	X = 663109.239 Y = 8800767.473			
127	X = 663109.239 Y = 8800767.473	X = 663109.239 Y = 8800767.473	X = 663109.239 Y = 8800767.473	X = 663109.239 Y = 8800767.473			
128	X = 663093.453 Y = 8800826.203	X = 663100.545 Y = 8800865.569	X = 663120.229 Y = 8800862.022	X = 663113.845 Y = 8800826.593	X = 663113.845 Y = 8800826.593		
129	X = 663073.769 Y = 8800829.749	X = 663073.769 Y = 8800829.749	X = 663100.545 Y = 8800865.569	X = 663093.453 Y = 8800826.203			
130	X = 663054.086 Y = 8800833.295	X = 663061.180 Y = 8800872.661	X = 663073.769 Y = 8800829.749	X = 663073.769 Y = 8800829.749			
131	X = 663061.180 Y = 8800872.661	X = 663041.494 Y = 8800876.207	X = 663061.180 Y = 8800872.661	X = 663054.086 Y = 8800833.295			
132	X = 663014.720 Y = 8800840.387	X = 663014.720 Y = 8800840.387	X = 663041.494 Y = 8800876.207	X = 663061.180 Y = 8800872.661			
133	X = 663061.180 Y = 8800872.661	X = 663014.720 Y = 8800840.387	X = 663080.862 Y = 8800869.115	X = 663080.862 Y = 8800869.115			
134	X = 663080.862 Y = 8800869.115	X = 663080.862 Y = 8800869.115	X = 663080.862 Y = 8800869.115	X = 663080.862 Y = 8800869.115			
135	X = 663080.862 Y = 8800869.115	X = 663080.862 Y = 8800869.115	X = 663080.862 Y = 8800869.115	X = 663126.611 Y = 8800897.452	X = 663120.228 Y = 8800862.023		
136	X = 663134.991 Y = 8800859.363	X = 663138.537 Y = 8800879.047	X = 663178.655 Y = 8800871.819	X = 663175.109 Y = 8800852.136			
137	X = 663138.537 Y = 8800879.047	X = 663141.374 Y = 8800894.793	X = 663146.019 Y = 8800898.020	X = 663182.201 Y = 8800891.502	X = 663182.201 Y = 8800891.502		
138	X = 663175.109 Y = 8800852.136	X = 663182.201 Y = 8800891.502	X = 663201.884 Y = 8800887.956	X = 663201.884 Y = 8800887.956			
139	X = 663201.884 Y = 8800887.956	X = 663201.884 Y = 8800887.956	X = 663221.567 Y = 8800884.410	X = 663221.567 Y = 8800884.410			
140	X = 663221.567 Y = 8800884.410	X = 663221.567 Y = 8800884.410	X = 663250.350 Y = 8800879.224	X = 663246.788 Y = 8800859.506			
141	X = 663263.253 Y = 8800893.324	X = 663270.144 Y = 8800931.543	X = 663289.832 Y = 8800927.997	X = 663282.331 Y = 8800886.353			
142	X = 663243.363 Y = 8800895.724	X = 663250.479 Y = 8800935.086	X = 663270.144 Y = 8800931.543	X = 663263.253 Y = 8800893.324			
143	X = 663223.680 Y = 8800899.270	X = 663230.777 Y = 8800938.636	X = 663250.460 Y = 8800935.089	X = 663243.363 Y = 8800895.724			
144	X = 663203.997 Y = 8800902.817	X = 663211.100 Y = 8800942.181	X = 663230.777 Y = 8800938.636	X = 663223.680 Y = 8800899.270			
145	X = 663188.047 Y = 8800905.690	X = 663184.820 Y = 8800910.336	X = 663191.207 Y = 8800945.765	X = 663211.100 Y = 8800942.181			
146	X = 663149.848 Y = 8800912.572	X = 663156.883 Y = 8800951.948	X = 663176.445 Y = 8800948.424	X = 663176.445 Y = 8800948.424	X = 663163.441 Y = 8800910.123		
147	X = 663130.165 Y = 8800916.118	X = 663137.257 Y = 8800955.484	X = 663156.883 Y = 8800951.948	X = 663149.848 Y = 8800912.572			
148	X = 663110.482 Y = 8800919.664	X = 663117.609 Y = 8800959.024	X = 663137.257 Y = 8800955.484	X = 663130.165 Y = 8800916.118			
149	X = 663090.799 Y = 8800923.210	X = 663097.891 Y = 8800962.576	X = 663117.609 Y = 8800959.024	X = 663110.482 Y = 8800919.664			
150	X = 663090.799 Y = 8800923.210	X = 663097.891 Y = 8800962.576	X = 663071.115 Y = 8800926.756	X = 663078.207 Y = 8800966.121			
151	X = 663038.638 Y = 8800973.251	X = 663045.025 Y = 8801008.680	X = 663049.672 Y = 8801011.907	X = 663065.617 Y = 8801009.035			
152	X = 663078.207 Y = 8800966.121	X = 663065.617 Y = 8801009.035	X = 663085.300 Y = 8801005.489	X = 663058.525 Y = 8800969.668			
153	X = 663078.207 Y = 8800966.121	X = 663097.891 Y = 8800962.576	X = 663085.300 Y = 8801005.489	X = 663104.983 Y = 8801001.943			
154	X = 663117.609 Y = 8800959.024	X = 663097.891 Y = 8800962.576	X = 663104.983 Y = 8801001.943	X = 663124.666 Y = 8800998.397			
155	X = 663144.349 Y = 8800994.851	X = 663117.609 Y = 8800959.024	X = 663124.666 Y = 8800998.397	X = 663137.257 Y = 8800955.484			

NOTES

REFERENCE DRAWINGS:

SITE SETTING OUT LAYOUT
C00290-00-TP-DAL-0001-001

SITE SETTING OUT CO ORDINATE
C00290-00-TP-DAL-0013-002
C00290-00-TP-DAL-0013-003
C00290-00-TP-DAL-0013-004
C00290-00-TP-DAL-0013-005

ISSUED FOR CONSTRUCTION

WorleyParsons RSA retains the copyright in all intellectual property, including designs and/or documents prepared in terms of this appointment for the project covered by the appointment. The client may use the designs and/or documents for the sole purpose of their intended use on this project only subject to payment for the design having been received. Use for any other purpose, whether or not the design and/or documents have been paid for constitutes an infringement of copyright, and all rights are reserved.

All dimensions must be verified on site before the works commence. Refer any discrepancies to the Engineer.

Copyright reserved

REVISIONS

NO.	DATE	CHECKED	DONE BY	DESCRIPTION
A	16/10/15		RJ	ISSUED FOR INTERNAL REVIEW
B	17/10/15		AR	ISSUED FOR DETAIL DESIGN
C	18/10/15		AR	ISSUED FOR SQUAD CHECK
D	23/10/15		AR	ISSUED FOR CLIENT REVIEW
E	25/11/15		CT	ISSUED FOR CLIENT APPROVAL
0	07/12/20 5		CT	ISSUED FOR CONSTRUCTION

WorleyParsons
resources & energy
39 MELROSE BOULEVARD, MELROSE ARCH, JOHANNESBURG
P.O. Box 61232, MARSHALLTOWN, 2107
TEL: +27 (0)11 218 3000
FAX: +27(0)11 218 3100
www.worleyparsons.com
WorleyParsons RSA (Pty) Ltd.

	NAME	SIGNATURE	DATE
DRAWN BY:	R J		15/10/2015
CHECKED:	L. PADAYACHEE		15/10/15
DESIGNER:	R. van SCHALKWYK		15/10/15
PR ENG:	D.du TOIT		15/10/15
PROJECT ENG MANAGER:	L. PADAYACHEE		15/10/15
LOCAL PR ENG:			
CLIENT:			

CLIENT

MOZAMBIQUE GAS DEVELOPMENT PROJECT

Anadarko
Moçambique Área 1, Lda

PROJECT
AMA 1
RESETTLEMENT
VILLAGE

DRAWING DESCRIPTION
RESETTLEMENT VILLAGE
SITE SETTING OUT
CO-ORDINATE LIST

SHEET 1 OF 5

SCALE	DATE
ORIGINAL DWG SIZE A1	DECEMBER 2015

DRAWING NUMBER	REV NO
C00290-00-TP-DAL-0013-001	0

ANADARKO DRAWING NUMBER
EA-MZ-CI0000-WOR-E04-00059-01

19. ROADS

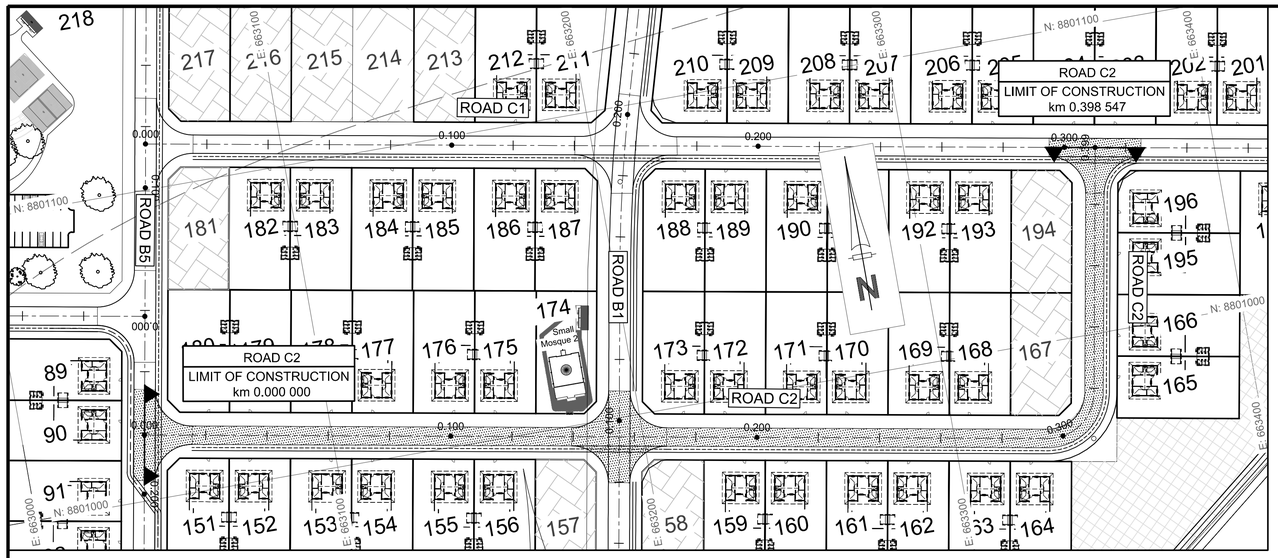

ROAD C2: km 0.000 - END

SCALE 1:1000

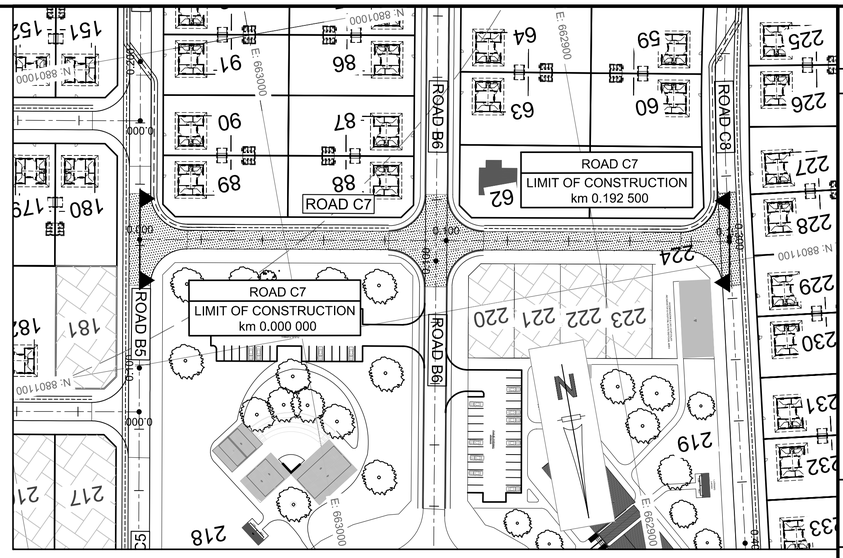

ROAD C7: km 0.000 - END

SCALE 1:1000

ROAD C2

LONGSECTION

HOR SCALE 1:2000
VER SCALE 1:200

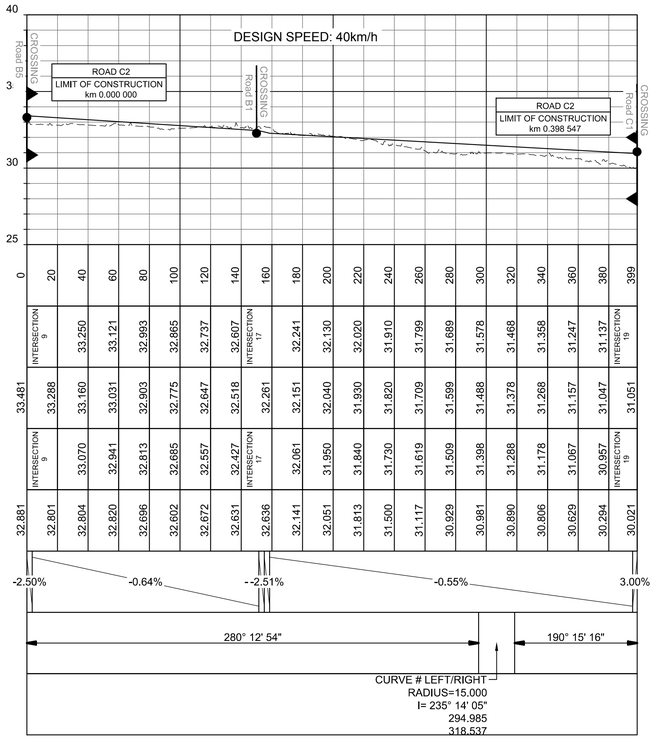

ROAD C7

LONGSECTION

HOR SCALE 1:2000
VER SCALE 1:200

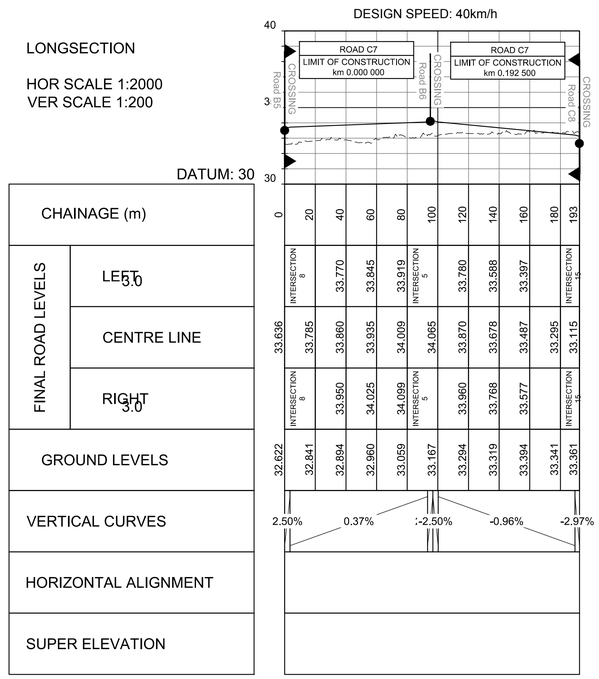

SCALE FOR REDUCED PLAN
0 10 20 30 40 50
50mm ON ORIGINAL DRAWING

NOTES

LEGEND

POLYCEM SIDE DRAIN

REFRENCE DWG's No:

1. EA-MZ-CI000-WOR-E05-00015-21
2. EA-MZ-CI000-WOR-E05-00018-09
3. EA-MZ-CI000-WOR-E05-00018-10
4. EA-MZ-CI000-WOR-E05-00018-11

ISSUED FOR CONSTRUCTION

WorleyParsons RSA retains the copyright in all intellectual property, including designs and/or documents prepared in terms of this appointment for the project covered by the appointment. The client may use the designs and/or documents for the sole purpose of their intended use on this project only subject to payment for the design having been received. Use for any other purpose, whether or not the design and/or documents have been paid for constitutes an infringement of copyright, and all rights are reserved.

All dimensions must be verified on site before the works commence. Refer any discrepancies to the Engineer.

Copyright reserved

REVISIONS

NO.	DATE	CHECKED	DONE BY	DESCRIPTION
A	04/08/15	D. d T.	A.U.	ISSUED FOR INTERNAL REVIEW
B	09/09/15	D. d T.	A.U.	ISSUED FOR DETAIL DESIGN
C	28/09/15	D. d T.	A.U.	ISSUED FOR SQUAD CHECK
D	13/10/15	D. d T.	A.U.	ISSUED FOR CLIENT REVIEW
E	30/10/15	D. d T.	A.U.	ISSUED FOR CLIENT APPROVAL
0	01/12/15	D. d T.	A.U.	ISSUED FOR CONSTRUCTION

WorleyParsons
resources & energy
39 MELROSE BOULEVARD, MELROSE ARCH, JOHANNESBURG
P.O. Box 61232, MARSHALLTOWN, 2107
TEL: +27 (0)11 218 3000
FAX: +27(0)11 218 3100
www.worleyparsons.com
WorleyParsons RSA (Pty) Ltd.

	NAME	SIGNATURE	DATE
DRAWN BY:	A.UJMA		01/12/2015
CHECKED:	D. du TOIT		01/12/2015
DESIGNER:	R. van SCHALKWYK		01/12/2015
PR ENG:	D. du TOIT Pr. No. 201170110		01/12/2015
PROJECT ENG MANAGER:	L. PADAYACHEE Pr. No.		01/12/2015
LOCAL PR ENG:			
CLIENT:			

CLIENT

MOZAMBIQUE GAS DEVELOPMENT PROJECT

Anadarko
Moçambique Área 1, Lda

PROJECT
AMA 1
RESETTLEMENT
VILLAGE

DRAWING DESCRIPTION

LAYOUT PLAN AND
LONGITUDINAL SECTION:

ROAD C2 & ROAD C7

SCALE	DATE
AS SHOWN (ORIGINAL DWG SIZE A1)	DECEMBER 2015

DRAWING NUMBER: C00290-00-CI-DAL-0001-009
REV NO: 0

ANADARKO DRAWING NUMBER: EA-MZ-CI0000-WOR-E05-00015-09

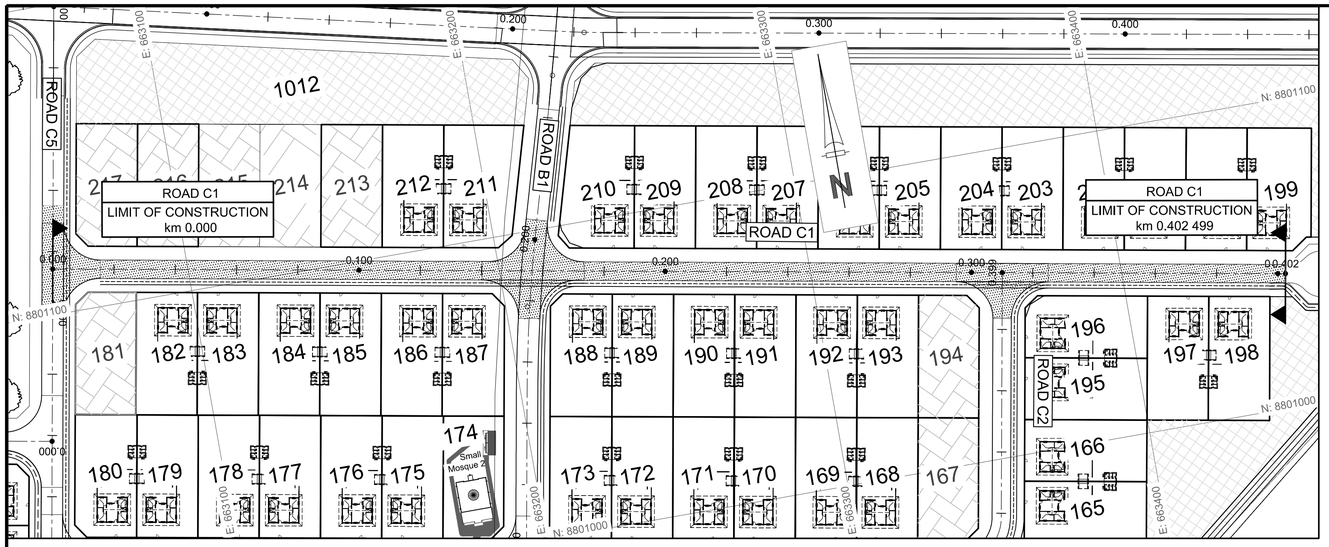

ROAD C1: km 0.000 - END

SCALE 1:1000

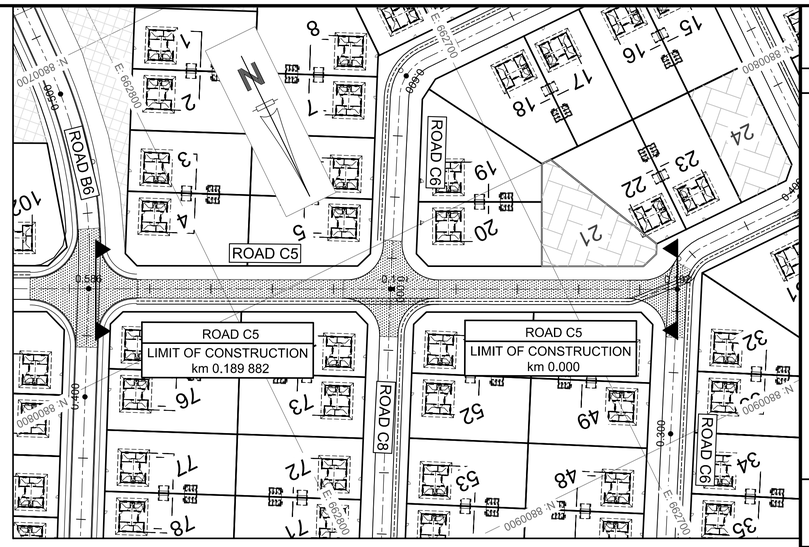

ROAD C5: km 0.000 - END

SCALE 1:1000

ROAD C1

LONGSECTION

HOR SCALE 1:2000
VER SCALE 1:200

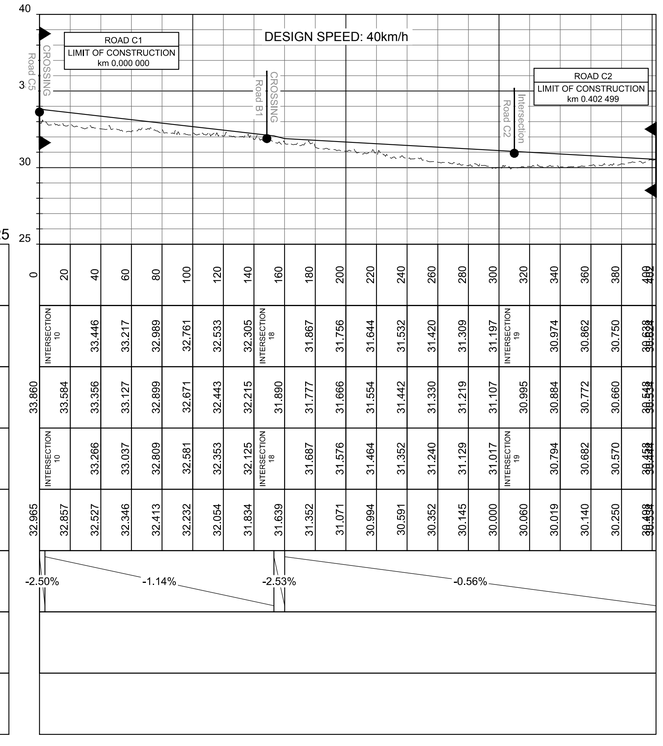

DATUM: 25

CHAINAGE (m)		0	20	40	60	80	100	120	140	160	180	200	220	240	260	280	300	320	340	360	380	400
FINAL ROAD LEVELS	LEFT 3.0	33.860	33.584	33.356	33.127	32.899	32.671	32.443	32.215	31.890	31.777	31.666	31.554	31.442	31.330	31.219	31.107	30.995	30.884	30.772	30.660	30.548
	CENTRE LINE		INTERSECTION 10	33.446	33.217	32.989	32.761	32.533	32.305	INTERSECTION 18	31.867	31.756	31.644	31.532	31.420	31.309	31.197	INTERSECTION 19	30.974	30.862	30.750	30.638
	RIGHT 3.0	32.965	32.857	33.266	33.037	32.809	32.581	32.353	32.125	INTERSECTION 18	31.687	31.576	31.464	31.352	31.240	31.129	31.017	INTERSECTION 19	30.794	30.682	30.570	30.458
GROUND LEVELS			32.527	32.346	32.413	32.232	32.054	31.834	31.639	31.352	31.071	30.994	30.591	30.352	30.145	30.000	30.060	30.019	30.140	30.250	30.498
VERTICAL CURVES			-2.50%		-1.14%				-2.53%				-0.56%									
HORIZONTAL ALIGNMENT																						
SUPER ELEVATION																						

ROAD C5

LONGSECTION

HOR SCALE 1:2000
VER SCALE 1:200

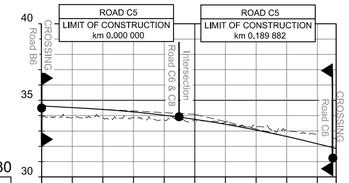

DATUM: 30

CHAINAGE (m)		0	20	40	60	80	100	120	140	160	180	192
FINAL ROAD LEVELS	LEFT	34.700	34.523	34.407	34.243	34.027	33.758	33.437	33.064	32.638	32.165	31.851
	CENTRE LINE		INTERSECTION 3	34.497	34.333	34.117	INTERSECTION 11	33.527	33.154	32.728		INTERSECTION 12
	RIGHT	33.883	INTERSECTION 3	34.317	34.153	33.937	INTERSECTION 11	33.347	32.974	32.548		INTERSECTION 12
GROUND LEVELS			33.873	33.904	33.873	33.700	33.813	33.556	33.268	33.038	32.737	32.491
VERTICAL CURVES			-2.41%	-0.54%			VCL=142 m K=76.3				-2.47%	-3.02%
HORIZONTAL ALIGNMENT												
SUPER ELEVATION												

SCALE FOR REDUCED PLAN
0 10 20 30 40 50
50mm ON ORIGINAL DRAWING

NOTES

LEGEND

POLYCEM SIDE DRAIN

REFRENCE DWG's No:

1. EA-MZ-CI000-WOR-E05-00015-21
2. EA-MZ-CI000-WOR-E05-00018-09
3. EA-MZ-CI000-WOR-E05-00018-10
4. EA-MZ-CI000-WOR-E05-00018-11

ISSUED FOR CONSTRUCTION

WorleyParsons RSA retains the copyright in all intellectual property, including designs and/or documents prepared in terms of this appointment for the project covered by the appointment. The client may use the designs and/or documents for the sole purpose of their intended use on this project only subject to payment for the design having been received. Use for any other purpose, whether or not the design and/or documents have been paid for constitutes an infringement of copyright, and all rights are reserved.

All dimensions must be verified on site before the works commence. Refer any discrepancies to the Engineer.

Copyright reserved

REVISIONS

NO.	DATE	CHECKED	DONE BY	DESCRIPTION
A	04/08/15	D. d T.	A.U.	ISSUED FOR INTERNAL REVIEW
B	09/09/15	D. d T.	A.U.	ISSUED FOR DETAIL DESIGN
C	28/09/15	D. d T.	A.U.	ISSUED FOR SQUAD CHECK
D	13/10/15	D. d T.	A.U.	ISSUED FOR CLIENT REVIEW
E	30/10/15	D. d T.	A.U.	ISSUED FOR CLIENT APPROVAL
0	01/12/15	D. d T.	A.U.	ISSUED FOR CONSTRUCTION

WorleyParsons
resources & energy
39 MELROSE BOULEVARD, MELROSE ARCH, JOHANNESBURG
P.O. Box 61232, MARSHALLTOWN, 2107
TEL: +27 (0)11 218 3000
FAX: +27(0)11 218 3100
www.worleyparsons.com
WorleyParsons RSA (Pty) Ltd.

	NAME	SIGNATURE	DATE
DRAWN BY:	A.UJMA		01/12/2015
CHECKED:	D. du TOIT		01/12/2015
DESIGNER:	R. van SCHALKWYK		01/12/2015
PR ENG:	D. du TOIT Pr. No. 201170110		01/12/2015
PROJECT ENG MANAGER:	L. PADAYACHEE Pr. No.		01/12/2015
LOCAL PR ENG:			
CLIENT:			

CLIENT

MOZAMBIQUE GAS DEVELOPMENT PROJECT

Anadarko
Moçambique Área 1, Lda

PROJECT
AMA 1
RESETTLEMENT
VILLAGE

DRAWING DESCRIPTION

LAYOUT PLAN AND
LONGITUDINAL SECTION:

ROAD C1 & ROAD C5

SCALE: AS SHOWN
ORIGINAL DWG SIZE A1

DATE: DECEMBER 2015

DRAWING NUMBER: C00290-00-CI-DAL-0001-0008

REV NO: 0

ANADARKO DRAWING NUMBER

EA-MZ-CI0000-WOR-E05-00015-08

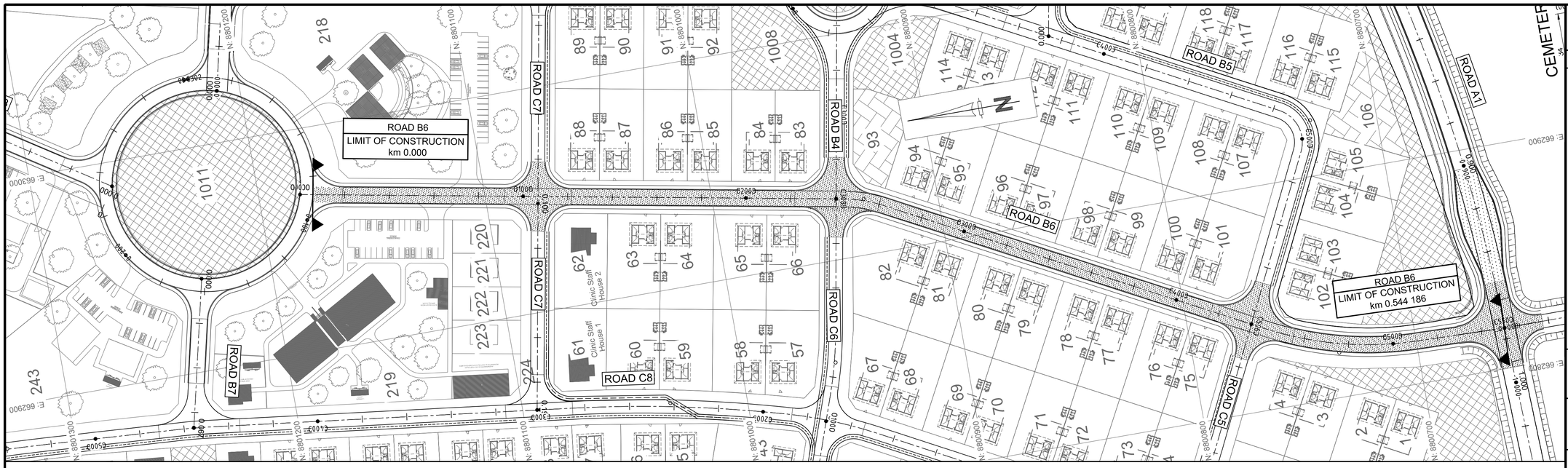

ROAD B6: km 0.000- END

SCALE 1:1000

ROAD B6

LONGSECTION

HOR SCALE 1:2000
VER SCALE 1:200

DATUM: 30

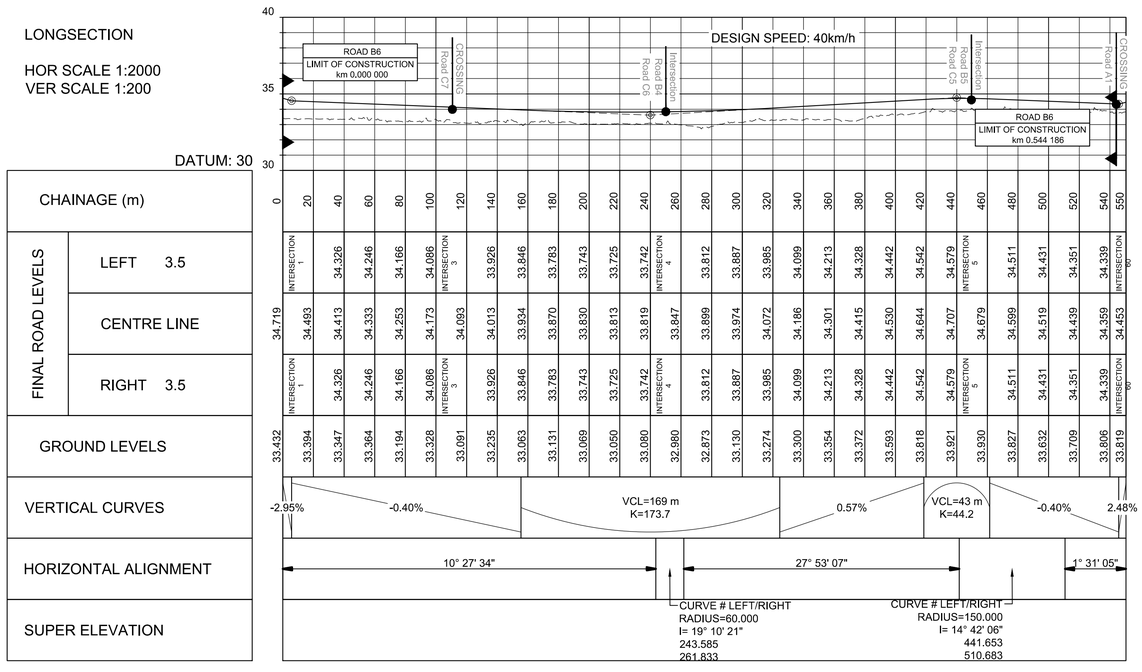

| | | |

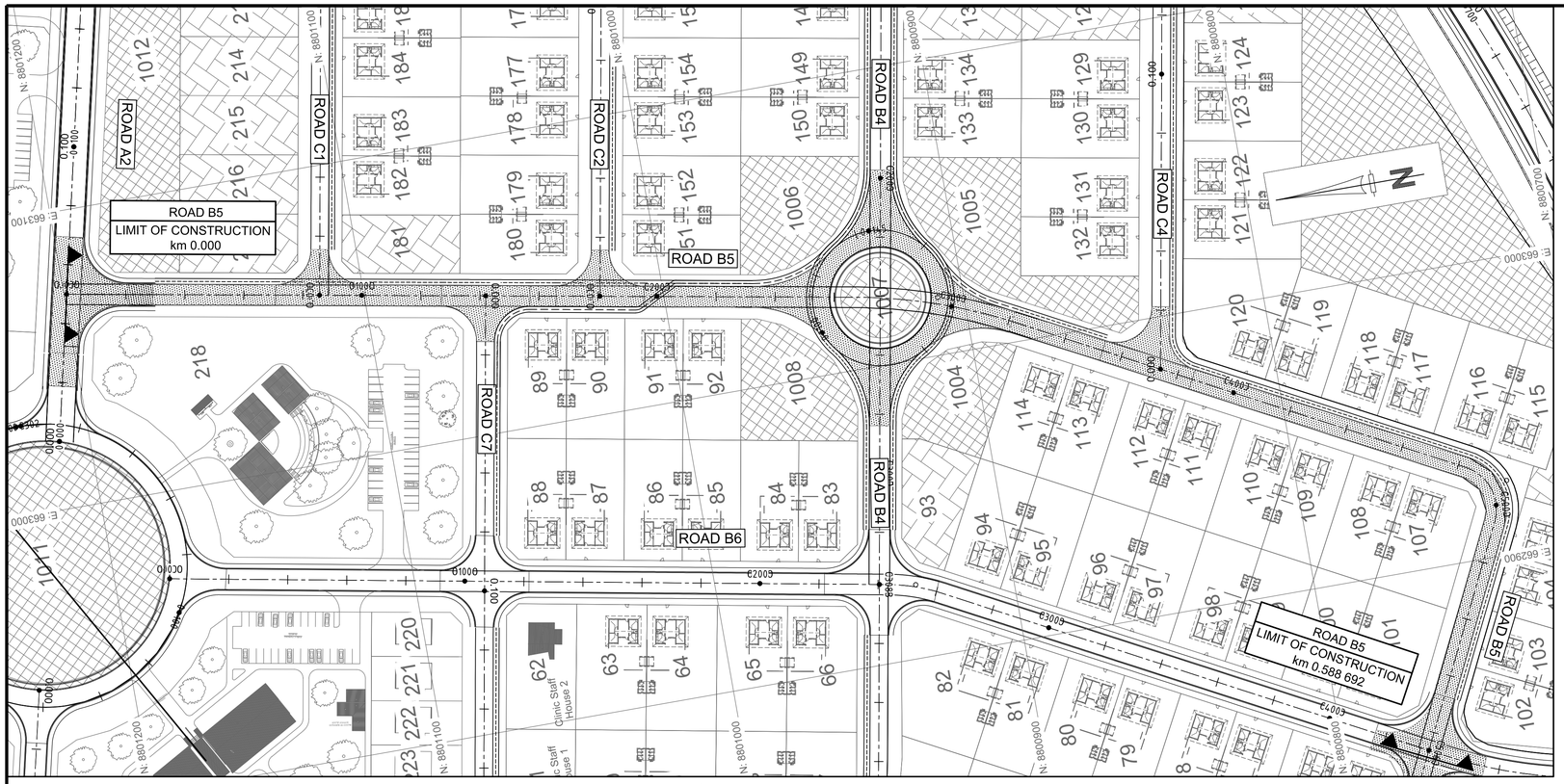

ROAD B5: km 0.000- END

SCALE 1:1000

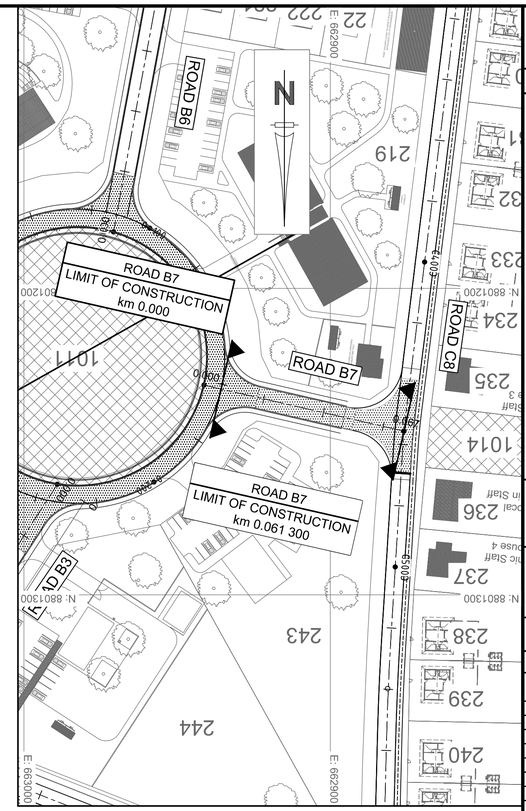

ROAD B7: km 0.000- END

SCALE 1:1000

ROAD B5

LONGSECTION

HOR SCALE 1:2000
VER SCALE 1:200

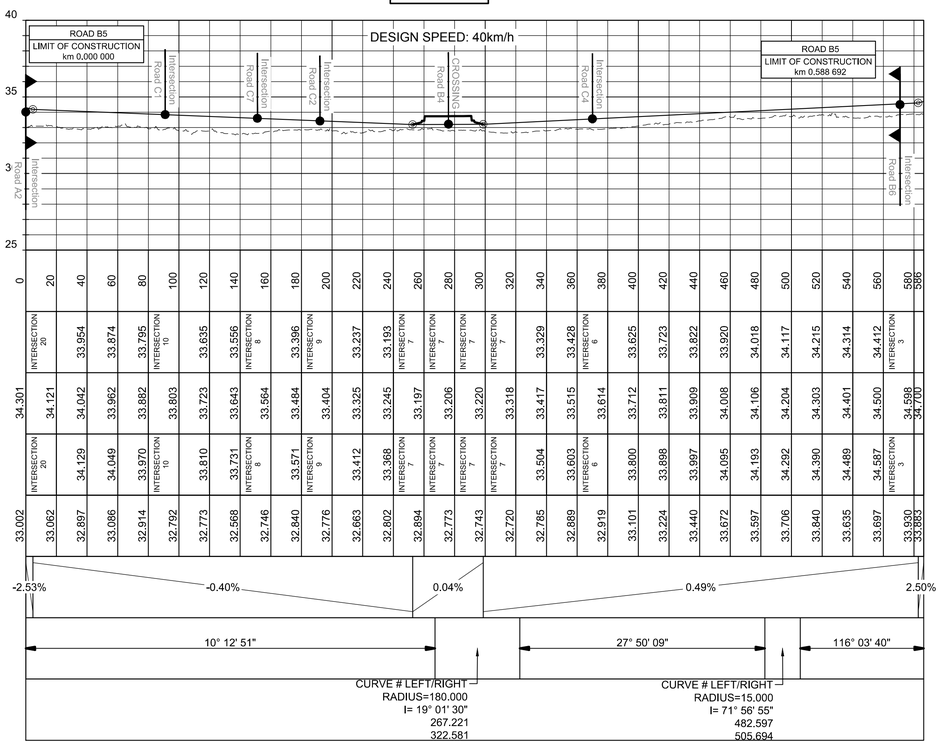

DATUM: 25

| CHAINAGE (m) | | |

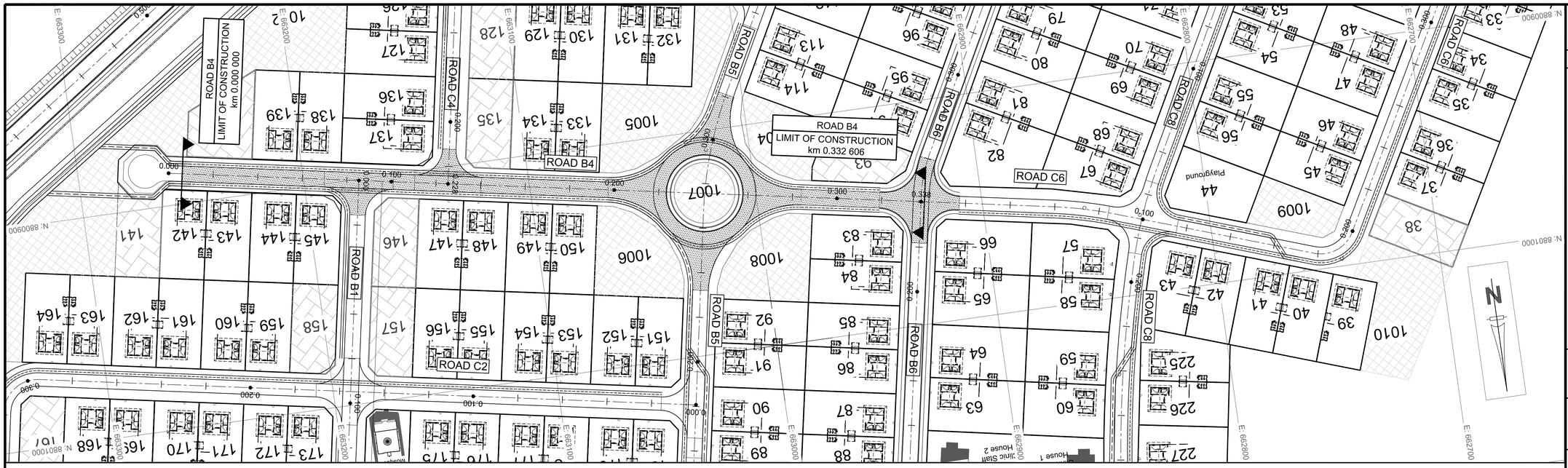

ROAD B4: km 0.000- END

SCALE 1:1000

ROAD B4

LONGSECTION

HOR SCALE 1:2000
VER SCALE 1:200

DATUM: 30

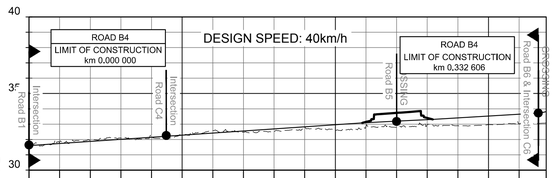

CHAINAGE (m)	0	20	40	60	80	100	120	140	160	180	200	220	240	260	280	300	320	338
FINAL ROAD LEVELS – LEFT 3.5	31.516	31.652	31.789	31.925	32.061 INTERSECTION 16		32.334 INTERSECTION 14		32.607	32.743	32.876	32.988 INTERSECTION 2	INTERSECTION 7		33.325	33.442		INTERSECTION 4
FINAL ROAD LEVELS – CENTRE LINE	31.604	31.740	31.876	32.012	32.149	32.285	32.421	32.558	32.694	32.830	32.967	33.099	33.201	33.297	33.411	33.530	33.648	33.819
FINAL ROAD LEVELS – RIGHT 3.5	31.516	31.652	31.789	31.925	32.061 INTERSECTION 16		32.334 INTERSECTION 14		32.607	32.743	32.876	32.988 INTERSECTION 2	INTERSECTION 7		33.325	33.442		INTERSECTION 4
GROUND LEVELS	31.639	31.839	31.950	32.100	32.106	32.263	32.577	32.480	32.523	32.813	32.605	32.849	32.792	32.980	32.905	32.962	33.020	33.080
VERTICAL CURVES																		
HORIZONTAL ALIGNMENT																		
SUPER ELEVATION																		

0.68% 0.51% 0.48% 0.59% 2.50%

SCALE FOR REDUCED PLAN
0 10 20 30 40 50
50mm ON ORIGINAL DRAWING

NOTES

LEGEND

POLYCEM SIDE DRAIN

REFRENCE DWG's No:
1. EA-MZ-CI000-WOR-E05-00015-21
2. EA-MZ-CI000-WOR-E05-00018-09
3. EA-MZ-CI000-WOR-E05-00018-11

ISSUED FOR CONSTRUCTION

WorleyParsons RSA retains the copyright in all intellectual property, including designs and/or documents prepared in terms of this appointment for the project covered by the appointment. The client may use the designs and/or documents for the sole purpose of their intended use on this project only subject to payment for the design having been received. Use for any other purpose, whether or not the design and/or documents have been paid for constitutes an infringement of copyright, and all rights are reserved.

All dimensions must be verified on site before the works commence. Refer any discrepancies to the Engineer.

Copyright reserved

REVISIONS

NO.	DATE	CHECKED	DONE BY	DESCRIPTION
A	04/08/15	D. d T.	A.U.	ISSUED FOR INTERNAL REVIEW
B	09/09/15	D. d T.	A.U.	ISSUED FOR DETAIL DESIGN
C	28/09/15	D. d T.	A.U.	ISSUED FOR SQUAD CHECK
D	13/10/15	D. d T.	A.U.	ISSUED FOR CLIENT REVIEW
E	30/10/15	D. d T.	A.U.	ISSUED FOR CLIENT APPROVAL
0	01/12/15	D. d T.	A.U.	ISSUED FOR CONSTRUCTION

WorleyParsons
resources & energy
39 MELROSE BOULEVARD, MELROSE ARCH, JOHANNESBURG
P.O. Box 61232, MARSHALLTOWN, 2107
TEL: +27 (0)11 218 3000
FAX: +27(0)11 218 3100
www.worleyparsons.com
WorleyParsons RSA (Pty) Ltd.

	NAME	SIGNATURE	DATE
DRAWN BY:	A.UJMA		01/12/2015
CHECKED:	D. du TOIT		01/12/2015
DESIGNER:	R. van SCHALKWYK		01/12/2015
PR ENG:	D. du TOIT Pr. No. 201170110		01/12/2015
PROJECT ENG MANAGER:	L. PADAYACHEE Pr. No.		01/12/2015
LOCAL PR ENG:			
CLIENT:			

CLIENT

MOZAMBIQUE GAS DEVELOPMENT PROJECT

Anadarko Moçambique Área 1, Lda

PROJECT
AMA 1
RESETTLEMENT
VILLAGE

DRAWING DESCRIPTION

LAYOUT PLAN AND
LONGITUDINAL SECTION:

ROAD B4

SCALE: AS SHOWN (ORIGINAL DWG SIZE A1)
DATE: DECEMBER 2015

DRAWING NUMBER: C00290-00-CI-DAL-0001-005
REV NO: 0

ANADARKO DRAWING NUMBER
EA-MZ-CI0000-WOR-E05-00015-05

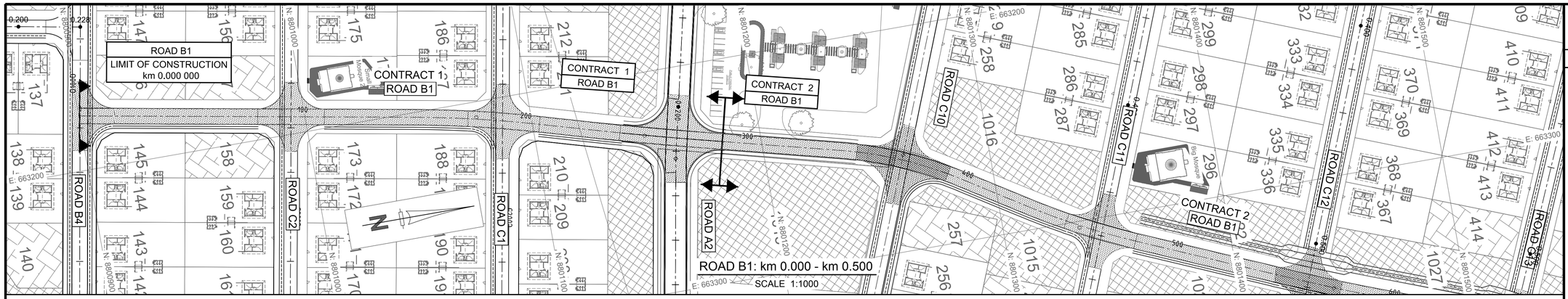

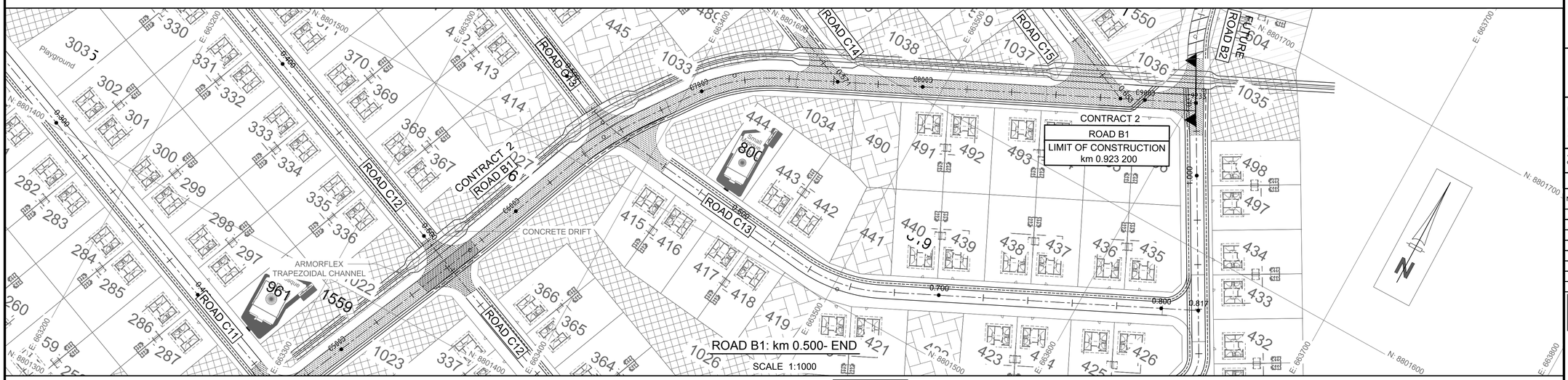

ROAD B1

LONGSECTION

HOR SCALE 1:2000
VER SCALE 1:200

DATUM: 25

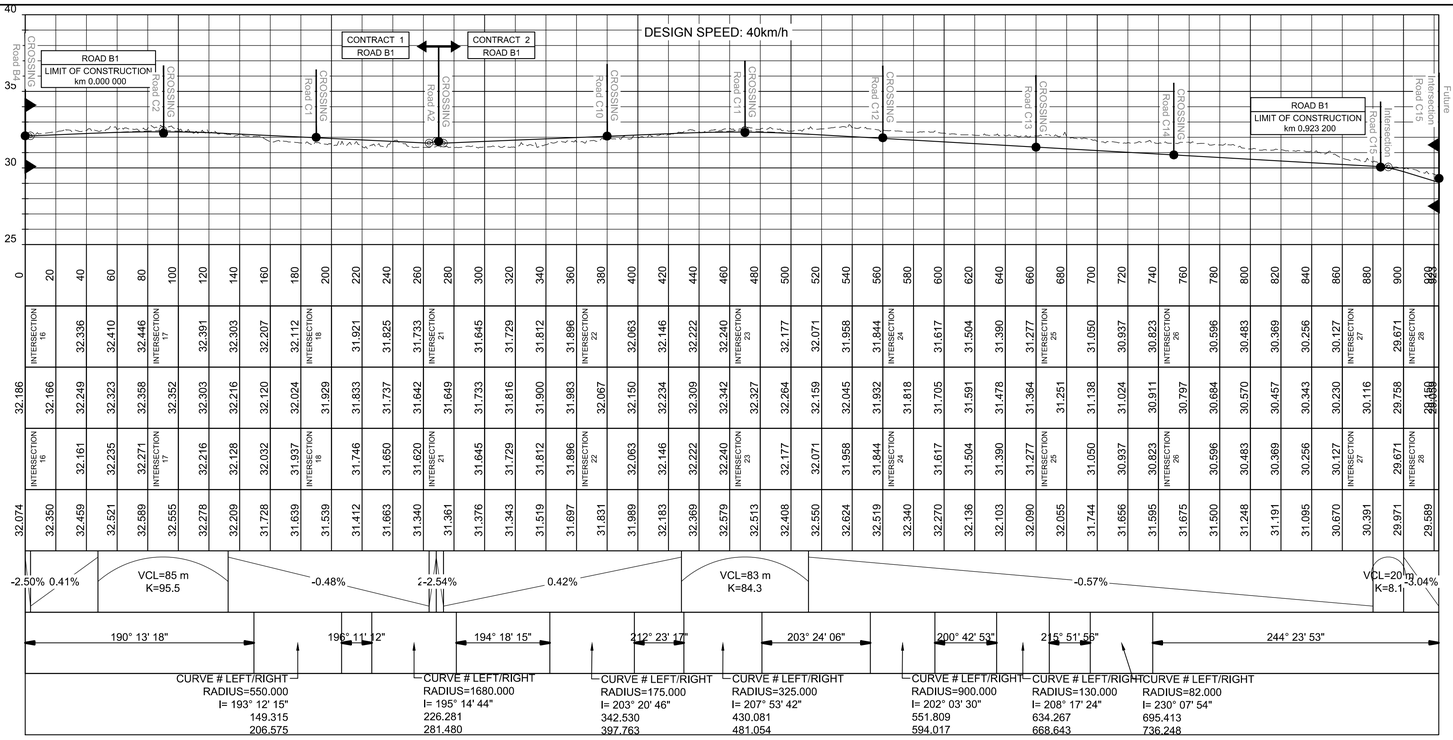

SCALE FOR REDUCED PLAN
0 10 20 30 40 50
50mm ON ORIGINAL DRAWING

NOTES

LEGEND

POLYCEM SIDE DRAIN

REFRENCE DWG's No:

1. EA-MZ-CI000-WOR-E05-00015-21
2. EA-MZ-CI000-WOR-E05-00015-22
3. EA-MZ-CI000-WOR-E05-00018-11
4. EA-MZ-CI000-WOR-E05-00018-12
5. EA-MZ-CI000-WOR-E05-00018-13

ISSUED FOR CONSTRUCTION

WorleyParsons RSA retains the copyright in all intellectual property, including designs and/or documents prepared in terms of this appointment for the project covered by the appointment. The client may use the designs and/or documents for the sole purpose of their intended use on this project only subject to payment for the design having been received. Use for any other purpose, whether or not the design and/or documents have been paid for constitutes an infringement of copyright, and all rights are reserved.

All dimensions must be verified on site before the works commence. Refer any discrepancies to the Engineer.

Copyright reserved

REVISIONS

NO.	DATE	CHECKED	DONE BY	DESCRIPTION
A	04/08/15	D. d T.	A.U.	ISSUED FOR INTERNAL REVIEW
B	09/09/15	D. d T.	A.U.	ISSUED FOR DETAIL DESIGN
C	28/09/15	D. d T.	A.U.	ISSUED FOR SQUAD CHECK
D	13/10/15	D. d T.	A.U.	ISSUED FOR CLIENT REVIEW
E	30/10/15	D. d T.	A.U.	ISSUED FOR CLIENT APPROVAL
0	01/12/15	D. d T.	A.U.	ISSUED FOR CONSTRUCTION

WorleyParsons
resources & energy
39 MELROSE BOULEVARD, MELROSE ARCH, JOHANNESBURG
P.O. Box 61232, MARSHALLTOWN, 2107
TEL: +27 (0)11 218 3000
FAX: +27(0)11 218 3100
www.worleyparsons.com
WorleyParsons RSA (Pty) Ltd.

	NAME	SIGNATURE	DATE
DRAWN BY:	A.UJMA		01/12/2015
CHECKED:	D. du TOIT		01/12/2015
DESIGNER:	R. van SCHALKWYK		01/12/2015
PR ENG:	D. du TOIT Pr. No. 201170110		01/12/2015
PROJECT ENG MANAGER:	L. PADAYACHEE Pr. No.		01/12/2015
LOCAL PR ENG:			
CLIENT:			

CLIENT

MOZAMBIQUE GAS DEVELOPMENT PROJECT

Anadarko
Moçambique Área 1, Lda

PROJECT
AMA 1
RESETTLEMENT
VILLAGE

DRAWING DESCRIPTION

LAYOUT PLAN AND
LONGITUDINAL SECTION:

ROAD B1

SCALE: AS SHOWN (ORIGINAL DWG SIZE A1)
DATE: DECEMBER 2015

DRAWING NUMBER: C00290-00-CI-DAL-0001-004
REV NO: 0

ANADARKO DRAWING NUMBER
EA-MZ-CI0000-WOR-E05-00015-04



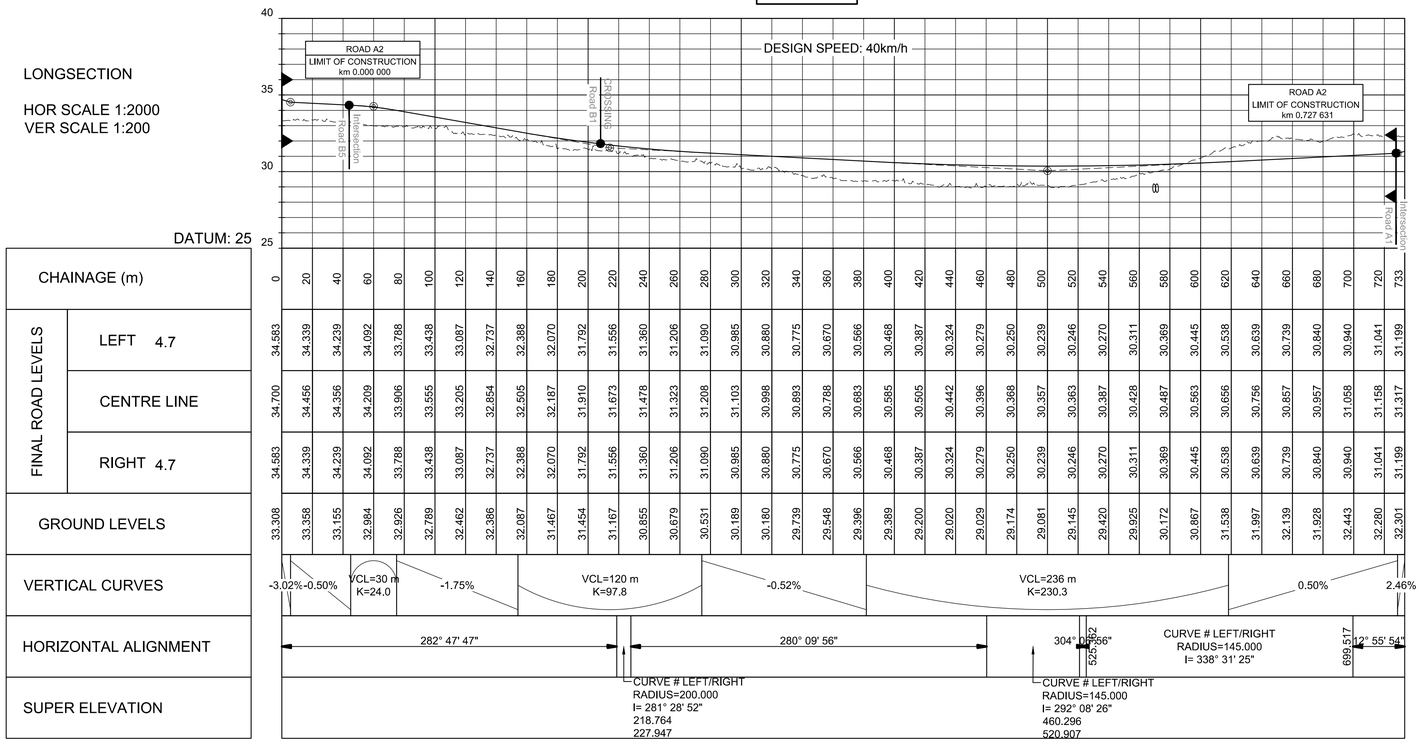

LONGSECTION

HOR SCALE 1:2000
VER SCALE 1:200

DATUM: 25

| | | |

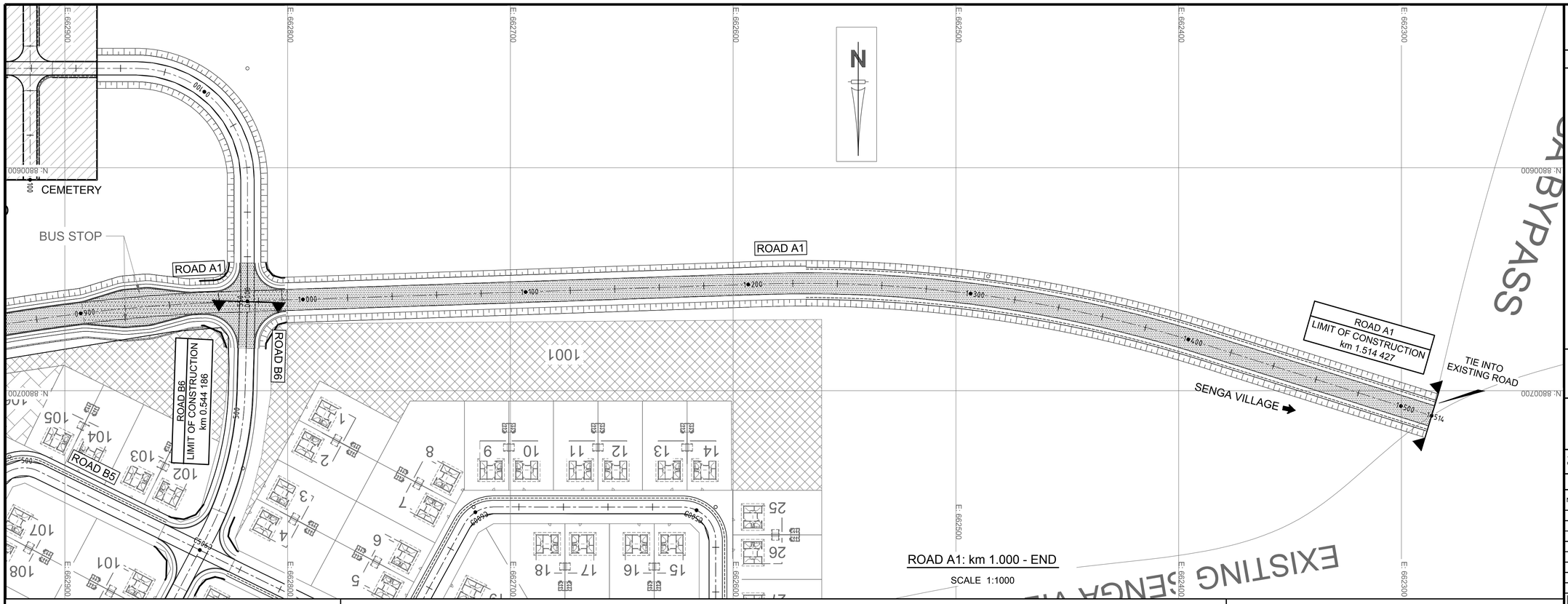

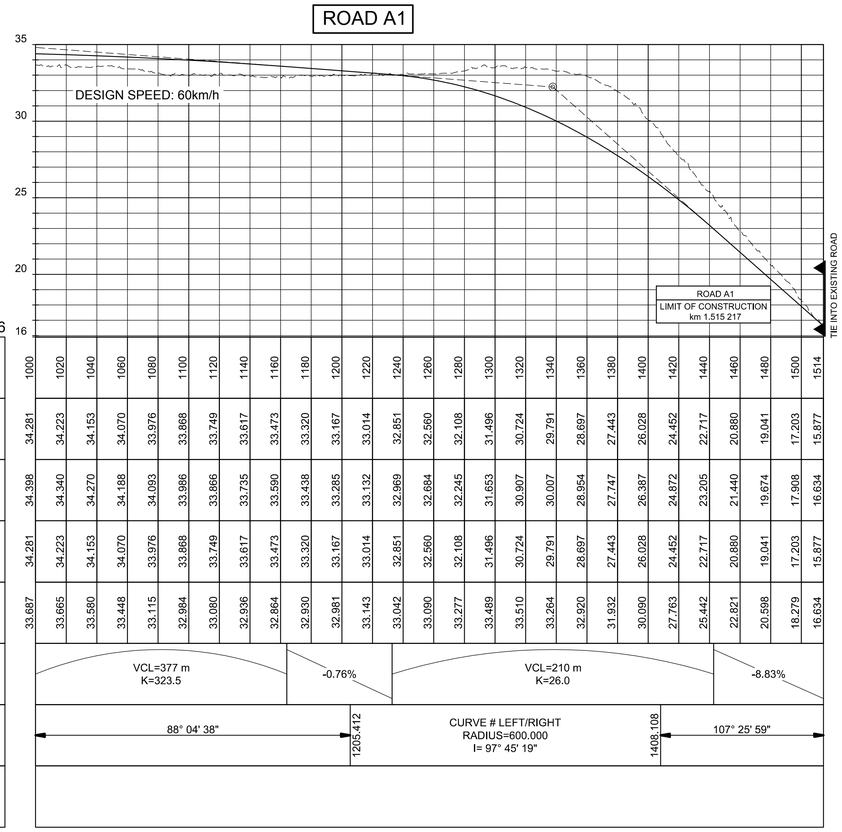

LONGSECTION

HOR SCALE 1:2000
VER SCALE 1:200

DATUM: 16

CHAINAGE (m)		1000	1020	1040	1060	1080	1100	1120	1140	1160	1180	1200	1220	1240	1260	1280	1300	1320	1340	1360	1380	1400	1420	1440	1460	1480	1500	1514
FINAL ROAD LEVELS	LEFT 4.7	34.281	34.223	34.153	34.070	33.976	33.868	33.749	33.617	33.473	33.320	33.167	33.014	32.851	32.560	32.108	31.496	30.724	29.791	28.697	27.443	26.028	24.452	22.717	20.880	19.041	17.203	15.877
	CENTRE LINE	34.398	34.340	34.270	34.188	34.093	33.986	33.866	33.735	33.590	33.438	33.285	33.132	32.969	32.684	32.245	31.653	30.907	30.007	28.954	27.747	26.387	24.872	23.205	21.440	19.674	17.908	16.634
	RIGHT 4.7	34.281	34.223	34.153	34.070	33.976	33.868	33.749	33.617	33.473	33.320	33.167	33.014	32.851	32.560	32.108	31.496	30.724	29.791	28.697	27.443	26.028	24.452	22.717	20.880	19.041	17.203	15.877
GROUND LEVELS		33.687	33.665	33.580	33.448	33.115	32.984	33.080	32.936	32.864	32.930	32.981	33.143	33.042	33.090	33.277	33.489	33.510	33.264	32.920	31.932	30.090	27.763	25.442	22.821	20.598	18.279	16.634
VERTICAL CURVES			VCL=377 m K=323.5					-0.76%					VCL=210 m K=26.0					-8.83%											
HORIZONTAL ALIGNMENT			88° 04' 38"										1205.412 CURVE # LEFT/RIGHT RADIUS=600.000 I= 97° 45' 19"												1408.108	107° 25' 59"		
SUPER ELEVATION																												

SCALE FOR REDUCED PLAN
0 10 20 30 40 50
50mm ON ORIGINAL DRAWING

NOTES

LEGEND

POLYCEM SIDE DRAIN

REFRENCE DWG's No:

1. EA-MZ-CI000-WOR-E05-00015-21
2. EA-MZ-CI000-WOR-E05-00015-22
3. EA-MZ-CI000-WOR-E05-00018-08

ISSUED FOR CONSTRUCTION

WorleyParsons RSA retains the copyright in all intellectual property, including designs and/or documents prepared in terms of this appointment for the project covered by the appointment. The client may use the designs and/or documents for the sole purpose of their intended use on this project only subject to payment for the design having been received. Use for any other purpose, whether or not the design and/or documents have been paid for constitutes an infringement of copyright, and all rights are reserved.

All dimensions must be verified on site before the works commence. Refer any discrepancies to the Engineer.

Copyright reserved

REVISIONS

NO.	DATE	CHECKED	DONE BY	DESCRIPTION
A	04/08/15	D. d T.	A.U.	ISSUED FOR INTERNAL REVIEW
B	09/09/15	D. d T.	A.U.	ISSUED FOR DETAIL DESIGN
C	28/09/15	D. d T.	A.U.	ISSUED FOR SQUAD CHECK
D	13/10/15	D. d T.	A.U.	ISSUED FOR CLIENT REVIEW
E	30/10/15	D. d T.	A.U.	ISSUED FOR CLIENT APPROVAL
0	01/12/15	D. d T.	A.U.	ISSUED FOR CONSTRUCTION

WorleyParsons
resources & energy
39 MELROSE BOULEVARD, MELROSE ARCH, JOHANNESBURG
P.O. Box 61232, MARSHALLTOWN, 2107
TEL: +27 (0)11 218 3000
FAX: +27(0)11 218 3100
www.worleyparsons.com
WorleyParsons RSA (Pty) Ltd.

	NAME	SIGNATURE	DATE
DRAWN BY:	A.UJMA		01/12/2015
CHECKED:	D. du TOIT		01/12/2015
DESIGNER:	R. van SCHALKWYK		01/12/2015
PR ENG:	D. du TOIT Pr. No. 201170110		01/12/2015
PROJECT ENG MANAGER:	L. PADAYACHEE Pr. No.		01/12/2015
LOCAL PR ENG:			
CLIENT:			

CLIENT

MOZAMBIQUE GAS DEVELOPMENT PROJECT

Anadarko
Moçambique Área 1, Lda

PROJECT
AMA 1
RESETTLEMENT
VILLAGE

DRAWING DESCRIPTION

LAYOUT PLAN AND
LONGITUDINAL SECTION:

ROAD A1 - SHEET 2 OF 2

SCALE	DATE
AS SHOWN ORIGINAL DWG SIZE A1	DECEMBER 2015

DRAWING NUMBER	REV NO
C00290-00-CI-DAL-0001-002	0

ANADARKO DRAWING NUMBER

EA-MZ-CI0000-WOR-E05-00015-02

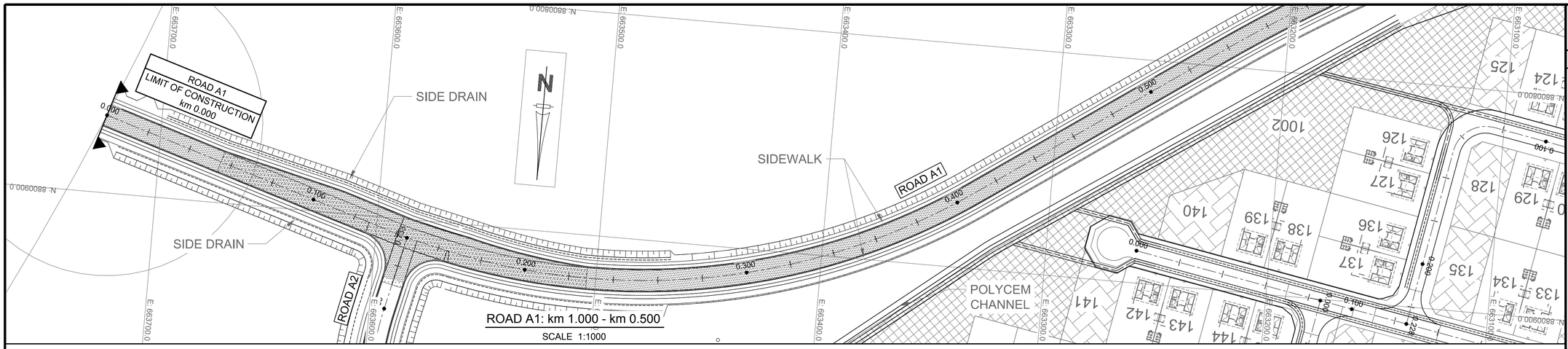

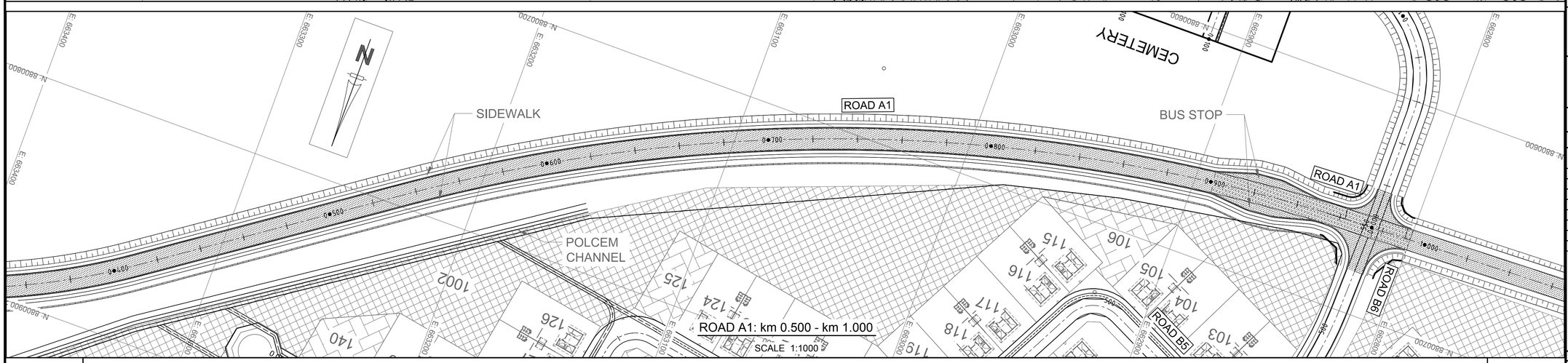

SCALE FOR REDUCED PLAN
0 10 20 30 40 50
50mm ON ORIGINAL DRAWING

NOTES

LEGEND

POLYCEM SIDE DRAIN

REFRENCE DWG's No:

1. EA-MZ-CI000-WOR-E05-00015-21
2. EA-MZ-CI000-WOR-E05-00018-08

ISSUED FOR CONSTRUCTION

WorleyParsons RSA retains the copyright in all intellectual property, including designs and/or documents prepared in terms of this appointment for the project covered by the appointment. The client may use the designs and/or documents for the sole purpose of their intended use on this project only subject to payment for the design having been received. Use for any other purpose, whether or not the design and/or documents have been paid for constitutes an infringement of copyright, and all rights are reserved.

All dimensions must be verified on site before the works commence. Refer any discrepancies to the Engineer.

Copyright reserved

REVISIONS

NO.	DATE	CHECKED	DONE BY	DESCRIPTION
A	04/08/15	D. d T.	A.U.	ISSUED FOR INTERNAL REVIEW
B	09/09/15	D. d T.	A.U.	ISSUED FOR DETAIL DESIGN
C	28/09/15	D. d T.	A.U.	ISSUED FOR SQUAD CHECK
D	13/10/15	D. d T.	A.U.	ISSUED FOR CLIENT REVIEW
E	30/10/15	D. d T.	A.U.	ISSUED FOR CLIENT APPROVAL
0	01/12/15	D. d T.	A.U.	ISSUED FOR CONSTRUCTION

WorleyParsons
resources & energy
39 MELROSE BOULEVARD, MELROSE ARCH, JOHANNESBURG
P.O. Box 61232, MARSHALLTOWN, 2107
TEL: +27 (0)11 218 3000
FAX: +27(0)11 218 3100
www.worleyparsons.com
WorleyParsons RSA (Pty) Ltd.

	NAME	SIGNATURE	DATE
DRAWN BY:	A.UJMA		01/12/2015
CHECKED:	D. du TOIT		01/12/2015
DESIGNER:	R. van SCHALKWYK		01/12/2015
PR ENG:	D. du TOIT Pr. No. 201170110		01/12/2015
PROJECT ENG MANAGER:	L. PADAYACHEE Pr. No.		01/12/2015
LOCAL PR ENG:			
CLIENT:			

CLIENT

MOZAMBIQUE GAS DEVELOPMENT PROJECT

Anadarko
Moçambique Área 1, Lda

PROJECT
AMA 1
RESETTLEMENT
VILLAGE

DRAWING DESCRIPTION

LAYOUT PLAN AND
LONGITUDINAL SECTION:

ROAD A1 - SHEET 1 OF 2

SCALE	DATE
AS SHOWN ORIGINAL DWG SIZE A1	DECEMBER 2015

DRAWING NUMBER: C00290-00-CI-DAL-0001-001 — REV NO: 0

ANADARKO DRAWING NUMBER: EA-MZ-CI0000-WOR-E05-00015-01

ROAD A1

LONGSECTION

HOR SCALE 1:2000
VER SCALE 1:200

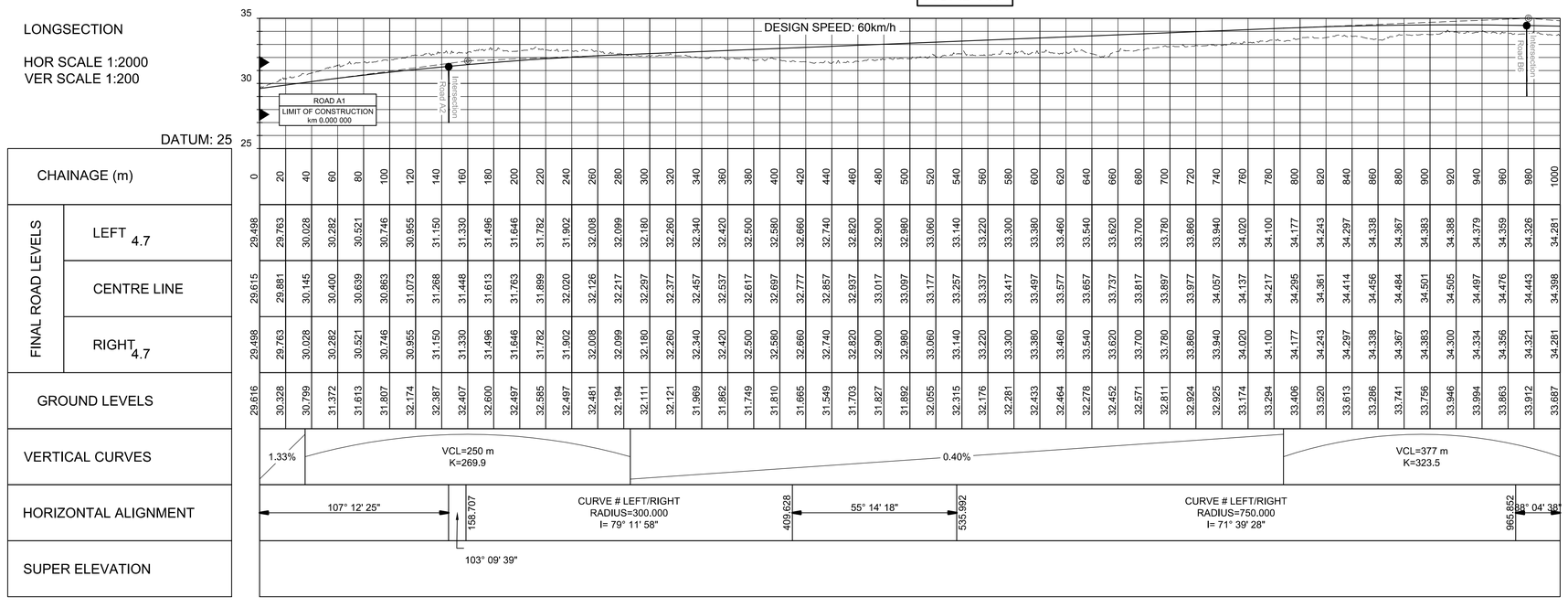

CHAINAGE (m)	0	20	40	60	80	100	120	140	160	180	200	220	240	260	280	300	320	340	360	380	400	420	440	460	480	500	520	540	560	580	600	620	640	660	680	700	720	740	760	780	800	820	840	860	880	900	920	940	960	980	1000
FINAL ROAD LEVELS LEFT 4.7	29.498	29.763	30.028	30.282	30.521	30.746	30.955	31.150	31.330	31.496	31.646	31.782	31.902	32.008	32.099	32.180	32.260	32.340	32.420	32.500	32.580	32.660	32.740	32.820	32.900	32.980	33.060	33.140	33.220	33.300	33.380	33.460	33.540	33.620	33.700	33.780	33.860	33.940	34.020	34.100	34.177	34.243	34.297	34.338	34.367	34.383	34.388	34.379	34.359	34.326	34.281
FINAL ROAD LEVELS CENTRE LINE	29.615	29.881	30.145	30.400	30.639	30.863	31.073	31.268	31.448	31.613	31.763	31.899	32.020	32.126	32.217	32.297	32.377	32.457	32.537	32.617	32.697	32.777	32.857	32.937	33.017	33.097	33.177	33.257	33.337	33.417	33.497	33.577	33.657	33.737	33.817	33.897	33.977	34.057	34.137	34.217	34.295	34.361	34.414	34.456	34.484	34.501	34.505	34.497	34.476	34.443	34.398
FINAL ROAD LEVELS RIGHT 4.7	29.498	29.763	30.028	30.282	30.521	30.746	30.955	31.150	31.330	31.496	31.646	31.782	31.902	32.008	32.099	32.180	32.260	32.340	32.420	32.500	32.580	32.660	32.740	32.820	32.900	32.980	33.060	33.140	33.220	33.300	33.380	33.460	33.540	33.620	33.700	33.780	33.860	33.940	34.020	34.100	34.177	34.243	34.297	34.338	34.367	34.383	34.300	34.334	34.356	34.321	34.281
GROUND LEVELS	29.616	30.328	30.799	31.372	31.613	31.807	32.174	32.387	32.407	32.600	32.497	32.585	32.497	32.481	32.194	32.111	32.121	31.969	31.862	31.749	31.810	31.665	31.549	31.703	31.827	31.892	32.055	32.315	32.176	32.281	32.433	32.464	32.278	32.452	32.571	32.811	32.924	32.925	33.174	33.294	33.406	33.520	33.613	33.286	33.741	33.756	33.946	33.994	33.863	33.912	33.687

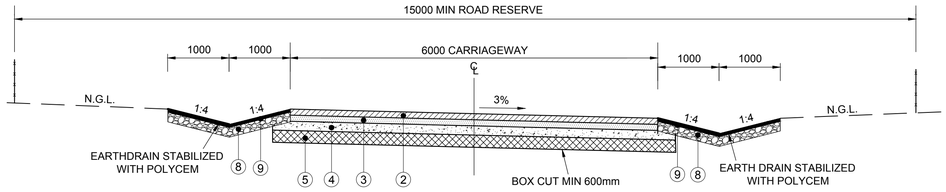

CROSS SECTION VILLAGE ROADS: ALL OTHER INTERNAL ROADS INCLUDING ROAD TO THE CEMETERY AND EXTENSION OF BYPASS ROAD TO EXISTING SENGA VILLAGE ROAD.

SCALE 1:50

MATERIAL STANDARDS: ALL OTHER INTERNAL ROADS INCLUDING ROAD TO THE CEMETERY AND EXTENSION OF BYPASS ROAD TO EXISTING SENGA VILLAGE ROAD.

No.	THICKNESS mm	DESCRIPTION	% COMP. AASHTO	MAX. PI.	GM MIN	MIN CBR AT % MOD. AASHTO	U.C.S. MPa	TRH CLASS
1	-	-	-	-	-	-	-	-
2	100	POLYMER MODIFIED BASE	98%	< 6	-	-	-	G6
3	100	SUBBASE	97%	< 12	-	-	-	G6
4	150	SELECTED NATURAL GRAVEL	95%	< 12	≥ 2.6	< 25%	-	G6
5	150	FILL	95%	< 12	≥ 2.7	≥ 15%	-	G7
6	150	ROADBED PREPARATION	95%	-	-	-	-	G9/G10
7	150	CUT TO FILL	93%	-	-	-	-	G10
8	150	NATURAL SELECTED MATERIAL	95%	< 12	≥ 2.7	≥ 15%	-	G7
9	50	POLYCEM (INSITU MATERIAL, 20% FLYASH)						G10

NOTE.
1. PI AFTER STABILIZATION 6
2. THE PI SHALL NOT EXCEED 12 OR A VALUE TO 3 TIMES THE GM PLUS 10, WHICHEVER IS THE HIGHER VALUE.

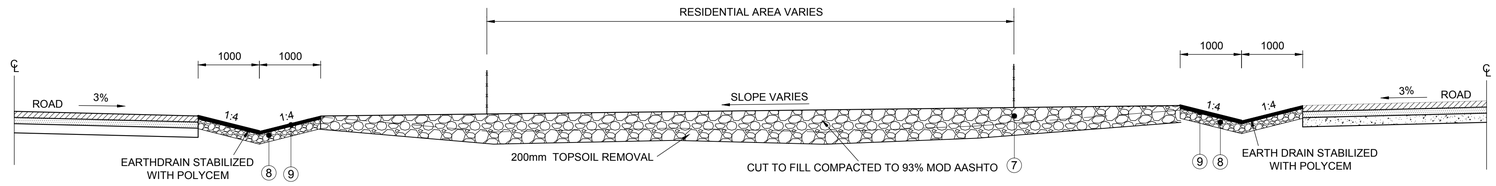

CROSS SECTION RESIDENTIAL AREAS: MASS EARTH WORKS

SCALE 1:50

SCALE FOR REDUCED PLAN
0 10 20 30 40 50
50mm ON ORIGINAL DRAWING

NOTES

LEGEND

PI = PLASTICITY INDEX
GM = GRADING MODULES
CBR = CALIFORNIA BEARING RATIO
U.C.S. = UNCONFINED COMPRESSIVE STRENGTH
THR = TECHNICAL RECOMMENDATION HIGHWAYS

ISSUED FOR CONSTRUCTION

WorleyParsons RSA retains the copyright in all intellectual property, including designs and/or documents prepared in terms of this appointment for the project covered by the appointment. The client may use the designs and/or documents for the sole purpose of their intended use on this project only subject to payment for the design having been received. Use for any other purpose, whether or not the design and/or documents have been paid for constitutes an infringement of copyright, and all rights are reserved.

All dimensions must be verified on site before the works commence. Refer any discrepancies to the Engineer.

Copyright reserved

REVISIONS

NO.	DATE	CHECKED	DONE BY	DESCRIPTION
A	04/08/15	D. d T.	A.U.	ISSUED FOR INTERNAL REVIEW
B	09/09/15	D. d T.	A.U.	ISSUED FOR DETAIL DESIGN
C	28/09/15	D. d T.	A.U.	ISSUED FOR SQUAD CHECK
D	13/10/15	D. d T.	A.U.	ISSUED FOR CLIENT REVIEW
E	30/10/15	D. d T.	A.U.	ISSUED FOR CLIENT APPROVAL
0	01/12/15	D. d T.	A.U.	ISSUED FOR CONSTRUCTION

WorleyParsons
resources & energy
39 MELROSE BOULEVARD, MELROSE ARCH, JOHANNESBURG
P.O. Box 61232, MARSHALLTOWN, 2107
TEL: +27 (0)11 218 3000
FAX: +27(0)11 218 3100
www.worleyparsons.com
WorleyParsons RSA (Pty) Ltd.

	NAME	SIGNATURE	DATE
DRAWN BY:	A.UJMA		01/12/2015
CHECKED:	D. du TOIT		01/12/2015
DESIGNER:	R. van SCHALKWYK		01/12/2015
PR ENG:	D. du TOIT Pr. No. 201170110		01/12/2015
PROJECT ENG MANAGER:	L. PADAYACHEE Pr. No.		01/12/2015
LOCAL PR ENG:			
CLIENT:			

CLIENT

MOZAMBIQUE GAS DEVELOPMENT PROJECT

Anadarko Moçambique Área 1, Lda

PROJECT
AMA 1
RESETTLEMENT
VILLAGE

DRAWING DESCRIPTION

TYPICAL CROSS-SECTIONS
SHEET 2 OF 2

SCALE
AS SHOWN
ORIGINAL DWG SIZE A1

DATE
DECEMBER 2015

DRAWING NUMBER
C00290-00-CI-DSE-0003-002

REV NO
0

ANADARKO DRAWING NUMBER
EA-MZ-CI0000-WOR-E05-00014-02

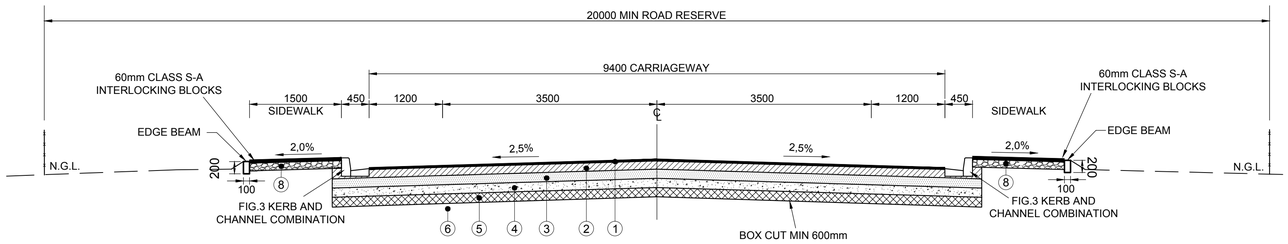

CROSS SECTION MAIN ACCESS ROAD AND BYPASS ROAD:

SCALE 1:50

MATERIAL STANDARDS: MAIN ACCESS AND BYPASS ROAD								
No.	THICKNESS mm	DESCRIPTION	% COMP. AASHTO	MAX. PI.	GM MIN	MIN CBR AT % MOD. AASHTO	U.C.S. MPa	TRH CLASS
1	15	POLYMER SLURRY SEAL	-	-	-	-	-	-
2	150	POLYMER MODIFIED BASE	98%	< 6	-	-	-	G6
3	150	SUBBASE	97%	< 12	-	-	-	G6
4	150	SELECTED NATURAL GRAVEL	95%	< 12	≥ 2.6	< 25%	-	G6
5	150	FILL	95%	< 12	≥ 2.7	≥ 15%	-	G7
6	150	ROADBED PREPARATION	95%	-	-	-	-	G9/G10
7	-	-	-	-	-	-	-	-
8	150	NATURAL SELECTED MATERIAL	95%	< 12	≥ 2.7	≥ 15%	-	G7

NOTE.
1. PI AFTER STABILIZATION 6
2. THE PI SHALL NOT EXCEED 12 OR A VALUE TO 3 TIMES THE GM PLUS 10, WHICHEVER IS THE HIGHER VALUE.

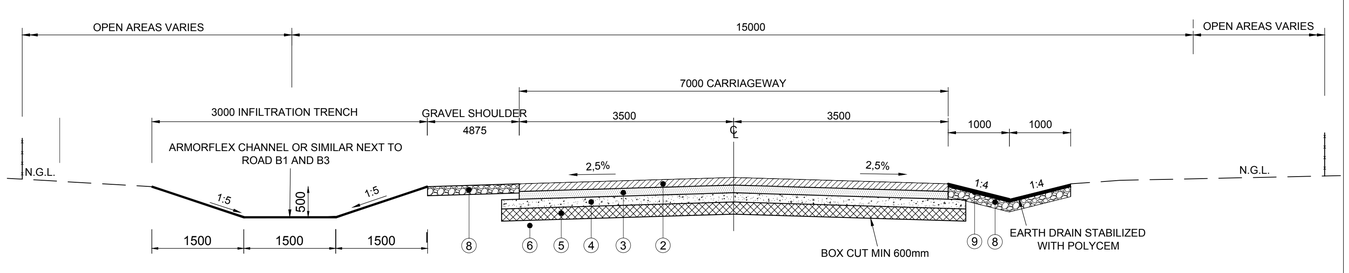

CROSS SECTION VILLAGE ROADS: ROAD B1 AND B3

SCALE 1:50

MATERIAL STANDARDS: ROAD B1 AND B3								
No.	THICKNESS mm	DESCRIPTION	% COMP. AASHTO	MAX. PI.	GM MIN	MIN CBR AT % MOD. AASHTO	U.C.S. MPa	TRH CLASS
1	-	-	-	-	-	-	-	-
2	100	POLYMER MODIFIED BASE	98%	< 6	-	-	-	G6
3	100	SUBBASE	97%	< 12	-	-	-	G6
4	150	SELECTED NATURAL GRAVEL	95%	< 12	≥ 2.6	< 25%	-	G6
5	150	FILL	95%	< 12	≥ 2.7	≥ 15%	-	G7
6	150	ROADBED PREPARATION	95%	-	-	> 15%	-	G9/G10
7	-	-	-	-	-	-	-	-
8	150	NATURAL SELECTED MATERIAL	95%	-	≥ 2.7	≥ 15%	-	G7
9	50	POLYCEM (INSITU MATERIAL, 20% FLYASH)						G10

NOTE.
1. PI AFTER STABILIZATION 6
2. THE PI SHALL NOT EXCEED 12 OR A VALUE TO 3 TIMES THE GM PLUS 10, WHICHEVER IS THE HIGHER VALUE.

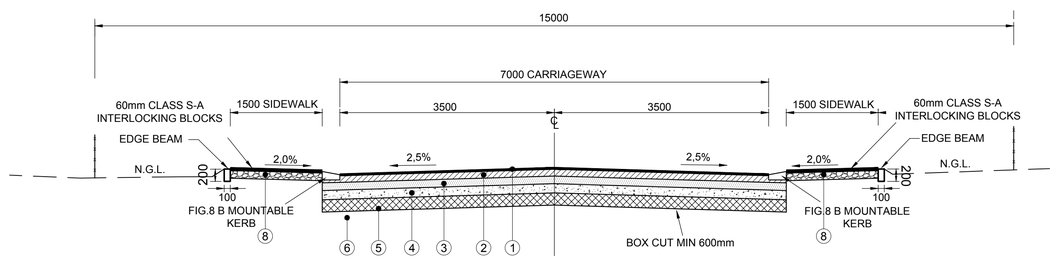

CROSS SECTION VILLAGE ROADS: ROAD B6, B7, PARTS OF B1,B3,C10 (SEE KEYPLAN)

SCALE 1:50

MATERIAL STANDARDS: ROAD B6, B7, PARTS OF B1,B3,C10								
No.	THICKNESS mm	DESCRIPTION	% COMP. AASHTO	MAX. PI.	GM MIN	MIN CBR AT % MOD. AASHTO	U.C.S. MPa	TRH CLASS
1	15	POLYMER SLURRY SEAL	-	-	-	-	-	
2	150	POLYMER MODIFIED BASE	98%	< 6	-	-	-	G6
3	150	SUBBASE	97%	< 6	-	-	-	G6
4	125	SELECTED NATURAL GRAVEL	95%	< 12	≥ 2.6	< 25%	-	G6
5	150	FILL	95%	< 12	≥ 2.7	≥ 15%	-	G7
6	150	ROADBED PREPARATION	95%	-	-	> 15%	-	G9/G10
7	-	-	-	-	-	-	-	-
8	150	NATURAL SELECTED MATERIAL	95%	< 12	≥ 2.7	≥ 15%	-	G7

NOTE.
1. PI AFTER STABILIZATION 6
2. THE PI SHALL NOT EXCEED 12 OR A VALUE TO 3 TIMES THE GM PLUS 10, WHICHEVER IS THE HIGHER VALUE.

SCALE FOR REDUCED PLAN
0 10 20 30 40 50
50mm ON ORIGINAL DRAWING

NOTES

LEGEND

PI = PLASTICITY INDEX
GM = GRADING MODULES
CBR = CALIFORNIA BEARING RATIO
U.C.S. = UNCONFINED COMPRESSIVE STRENGTH
THR = TECHNICAL RECOMMENDATION HIGHWAYS

ISSUED FOR CONSTRUCTION

WorleyParsons RSA retains the copyright in all intellectual property, including designs and/or documents prepared in terms of this appointment for the project covered by the appointment. The client may use the designs and/or documents for the sole purpose of their intended use on this project only subject to payment for the design having been received. Use for any other purpose, whether or not the design and/or documents have been paid for constitutes an infringement of copyright, and all rights are reserved.

All dimensions must be verified on site before the works commence. Refer any discrepancies to the Engineer.

Copyright reserved

REVISIONS

NO.	DATE	CHECKED	DONE BY	DESCRIPTION
A	04/08/15	D. d T.	A.U.	ISSUED FOR INTERNAL REVIEW
B	09/09/15	D. d T.	A.U.	ISSUED FOR DETAIL DESIGN
C	28/09/15	D. d T.	A.U.	ISSUED FOR SQUAD CHECK
D	13/10/15	D. d T.	A.U.	ISSUED FOR CLIENT REVIEW
E	30/10/15	D. d T.	A.U.	ISSUED FOR CLIENT APPROVAL
0	01/12/15	D. d T.	A.U.	ISSUED FOR CONSTRUCTION

WorleyParsons
resources & energy
39 MELROSE BOULEVARD, MELROSE ARCH, JOHANNESBURG
P.O. Box 61232, MARSHALLTOWN, 2107
TEL: +27 (0)11 218 3000
FAX: +27(0)11 218 3100
www.worleyparsons.com
WorleyParsons RSA (Pty) Ltd.

	NAME	SIGNATURE	DATE
DRAWN BY:	A.UJMA		01/12/2015
CHECKED:	D. du TOIT		01/12/2015
DESIGNER:	R. van SCHALKWYK		01/12/2015
PR ENG:	D. du TOIT Pr. No. 201170110		01/12/2015
PROJECT ENG MANAGER:	L. PADAYACHEE Pr. No.		01/12/2015
LOCAL PR ENG:			
CLIENT:			

CLIENT

MOZAMBIQUE GAS DEVELOPMENT PROJECT

Anadarko
Moçambique Área 1, Lda

PROJECT
AMA 1 RESETTLEMENT VILLAGE

DRAWING DESCRIPTION

TYPICAL CROSS-SECTIONS
SHEET 1 OF 2

SCALE	DATE
AS SHOWN (ORIGINAL DWG SIZE A1)	DECEMBER 2015

DRAWING NUMBER: C00290-00-CI-DSE-0003-001
REV NO: 0

ANADARKO DRAWING NUMBER
EA-MZ-CI0000-WOR-E05-00014-01

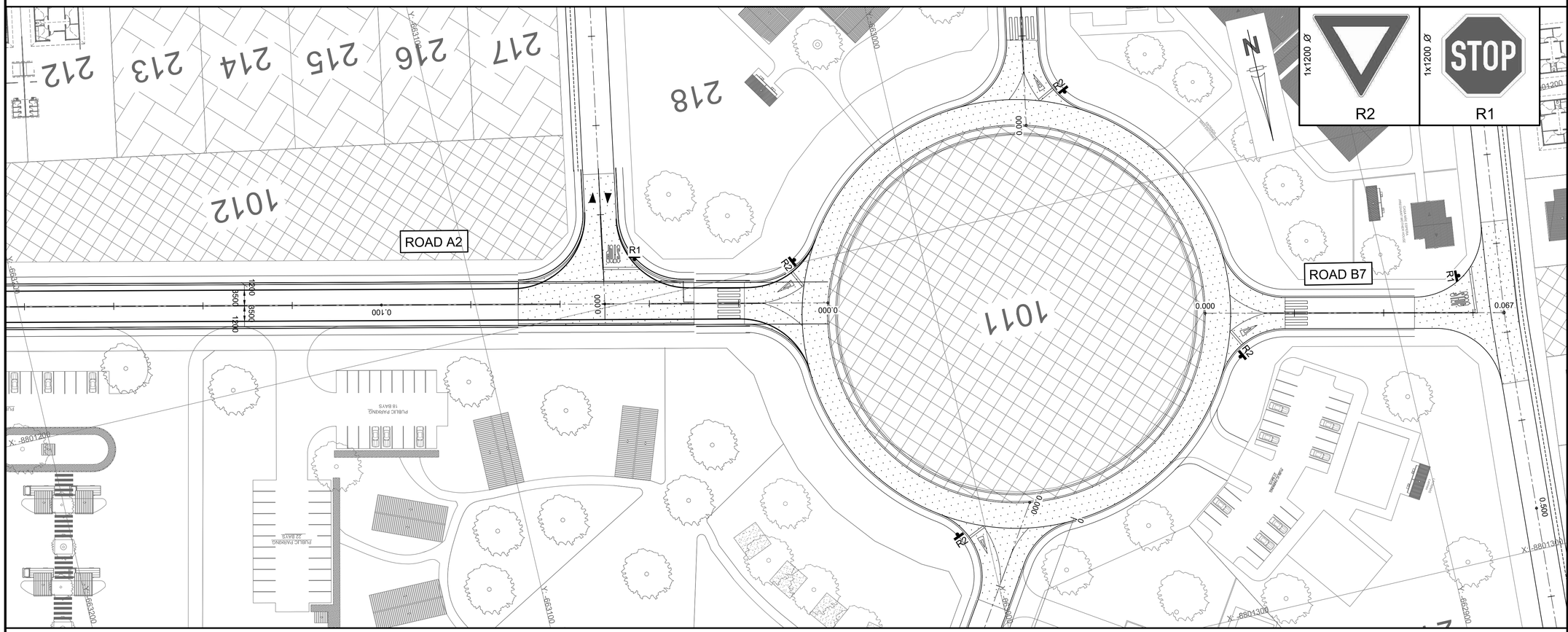

SCALE FOR REDUCED PLAN
0 10 20 30 40 50
50mm ON ORIGINAL DRAWING

NOTES

REFRENCE DWG's No:

1. EA-MZ-CI000-WOR-E05-00015-03
2. EA-MZ-CI000-WOR-E05-00015-06
3. EA-MZ-CI000-WOR-E05-00015-12

ISSUED FOR CONSTRUCTION

WorleyParsons RSA retains the copyright in all intellectual property, including designs and/or documents prepared in terms of this appointment for the project covered by the appointment. The client may use the designs and/or documents for the sole purpose of their intended use on this project only subject to payment for the design having been received. Use for any other purpose, whether or not the design and/or documents have been paid for constitutes an infringement of copyright, and all rights are reserved.

All dimensions must be verified on site before the works commence. Refer any discrepancies to the Engineer.

Copyright reserved

REVISIONS

NO.	DATE	CHECKED	DONE BY	DESCRIPTION
A	04/08/15	D. d T.	A.U.	ISSUED FOR INTERNAL REVIEW
B	09/09/15	D. d T.	A.U.	ISSUED FOR DETAIL DESIGN
C	28/09/15	D. d T.	A.U.	ISSUED FOR SQUAD CHECK
D	13/10/15	D. d T.	A.U.	ISSUED FOR CLIENT REVIEW
E	30/10/15	D. d T.	A.U.	ISSUED FOR CLIENT APPROVAL
0	01/12/15	D. d T.	A.U.	ISSUED FOR CONSTRUCTION

WorleyParsons
resources & energy
39 MELROSE BOULEVARD, MELROSE ARCH, JOHANNESBURG
P.O. Box 61232, MARSHALLTOWN, 2107
TEL: +27 (0)11 218 3000
FAX: +27(0)11 218 3100
www.worleyparsons.com
WorleyParsons RSA (Pty) Ltd.

	NAME	SIGNATURE	DATE
DRAWN BY:	A.UJMA		01/12/2015
CHECKED:	D. du TOIT		01/12/2015
DESIGNER:	R. van SCHALKWYK		01/12/2015
PR ENG:	D. du TOIT Pr. No. 201170110		01/12/2015
PROJECT ENG MANAGER:	L. PADAYACHEE Pr. No.		01/12/2015
LOCAL PR ENG:			
CLIENT:			

CLIENT

MOZAMBIQUE GAS DEVELOPMENT PROJECT

Anadarko
Moçambique Área 1, Lda

PROJECT
AMA 1
RESETTLEMENT
VILLAGE

DRAWING DESCRIPTION

ROAD SIGNS AND ROAD MARKINGS
PLAN - ROAD A2, B1 AND C10
ACCESS TO SCHOOL

SHEET 2 OF 2

SCALE	DATE
1:1000 ORIGINAL DWG SIZE A1	DECEMBER 2015

DRAWING NUMBER	REV NO
C00290-00-CI-DLP-0013-006	0

ANADARKO DRAWING NUMBER

EA-MZ-CI0000-WOR-E05-00019-06

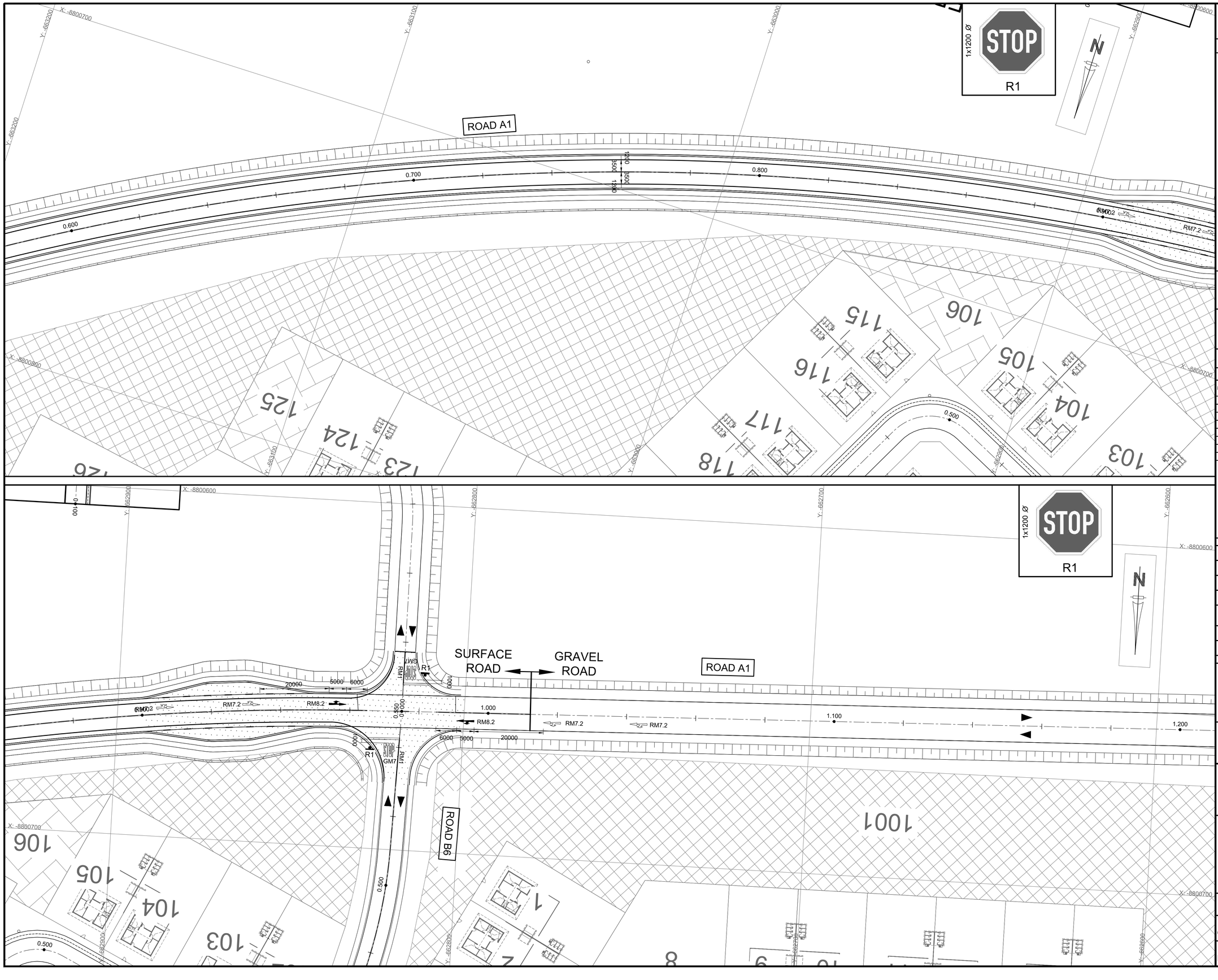

SCALE FOR REDUCED PLAN
0 10 20 30 40 50
50mm ON ORIGINAL DRAWING

NOTES

REFRENCE DWG's No:

1. EA-MZ-CI000-WOR-E05-00015-01
2. EA-MZ-CI000-WOR-E05-00015-02

ISSUED FOR CONSTRUCTION

WorleyParsons RSA retains the copyright in all intellectual property, including designs and/or documents prepared in terms of this appointment for the project covered by the appointment. The client may use the designs and/or documents for the sole purpose of their intended use on this project only subject to payment for the design having been received. Use for any other purpose, whether or not the design and/or documents have been paid for constitutes an infringement of copyright, and all rights are reserved.

All dimensions must be verified on site before the works commence. Refer any discrepancies to the Engineer.

Copyright reserved

REVISIONS

NO.	DATE	CHECKED	DONE BY	DESCRIPTION
A	04/08/15	D. d T.	A.U.	ISSUED FOR INTERNAL REVIEW
B	09/09/15	D. d T.	A.U.	ISSUED FOR DETAIL DESIGN
C	28/09/15	D. d T.	A.U.	ISSUED FOR SQUAD CHECK
D	13/10/15	D. d T.	A.U.	ISSUED FOR CLIENT REVIEW
E	30/10/15	D. d T.	A.U.	ISSUED FOR CLIENT APPROVAL
0	01/12/15	D. d T.	A.U.	ISSUED FOR CONSTRUCTION

WorleyParsons
resources & energy
39 MELROSE BOULEVARD, MELROSE ARCH, JOHANNESBURG
P.O. Box 61232, MARSHALLTOWN, 2107
TEL: +27 (0)11 218 3000
FAX: +27(0)11 218 3100
www.worleyparsons.com
WorleyParsons RSA (Pty) Ltd.

	NAME	SIGNATURE	DATE
DRAWN BY:	A.UJMA		01/12/2015
CHECKED:	D. du TOIT		01/12/2015
DESIGNER:	R. van SCHALKWYK		01/12/2015
PR ENG:	D. du TOIT Pr. No. 201170110		01/12/2015
PROJECT ENG MANAGER:	L. PADAYACHEE Pr. No.		01/12/2015
LOCAL PR ENG:			
CLIENT:			

CLIENT

MOZAMBIQUE GAS DEVELOPMENT PROJECT

Anadarko
Moçambique Área 1, Lda

PROJECT
AMA 1
RESETTLEMENT
VILLAGE

DRAWING DESCRIPTION

ROAD SIGNS AND ROAD MARKINGS
PLAN - ROAD A1

SHEET 2 OF 2

SCALE	DATE
1:1000 ORIGINAL DWG SIZE A1	DECEMBER 2015

DRAWING NUMBER
C00290-00-CI-DLP-0013-005

REV NO
0

ANADARKO DRAWING NUMBER
EA-MZ-CI0000-WOR-E05-00019-05

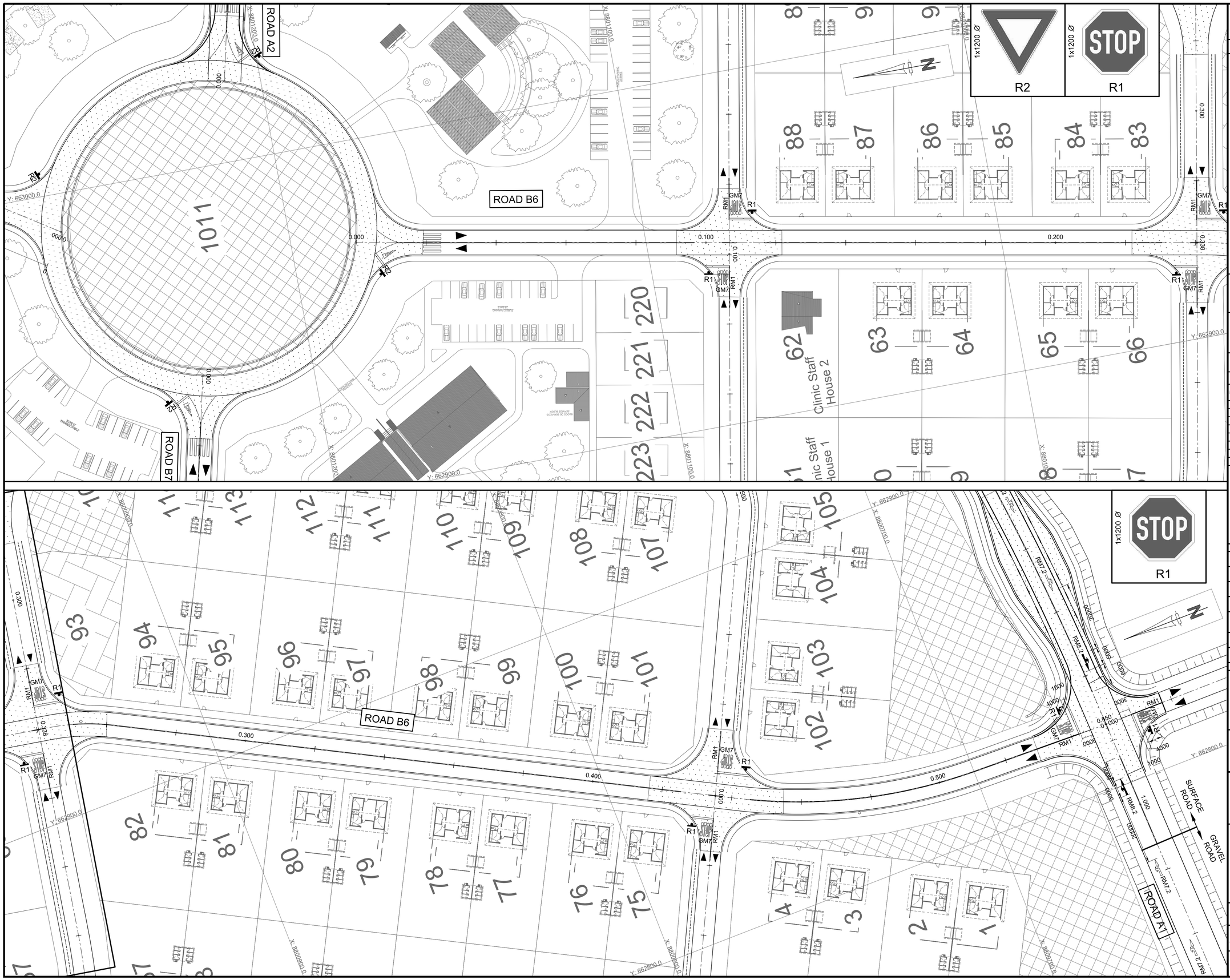

SCALE FOR REDUCED PLAN
0 10 20 30 40 50
50mm ON ORIGINAL DRAWING

NOTES

REFRENCE DWG's No:

1. EA-MZ-CI000-WOR-E05-00015-01
2. EA-MZ-CI000-WOR-E05-00015-02
3. EA-MZ-CI000-WOR-E05-00015-06
4. EA-MZ-CI000-WOR-E05-00015-07

ISSUED FOR CONSTRUCTION

WorleyParsons RSA retains the copyright in all intellectual property, including designs and/or documents prepared in terms of this appointment for the project covered by the appointment. The client may use the designs and/or documents for the sole purpose of their intended use on this project only subject to payment for the design having been received. Use for any other purpose, whether or not the design and/or documents have been paid for constitutes an infringement of copyright, and all rights are reserved.

All dimensions must be verified on site before the works commence. Refer any discrepancies to the Engineer.

Copyright reserved

REVISIONS

NO.	DATE	CHECKED	DONE BY	DESCRIPTION
A	04/08/15	D. d T.	A.U.	ISSUED FOR INTERNAL REVIEW
B	09/09/15	D. d T.	A.U.	ISSUED FOR DETAIL DESIGN
C	28/09/15	D. d T.	A.U.	ISSUED FOR SQUAD CHECK
D	13/10/15	D. d T.	A.U.	ISSUED FOR CLIENT REVIEW
E	30/10/15	D. d T.	A.U.	ISSUED FOR CLIENT APPROVAL
0	01/12/15	D. d T.	A.U.	ISSUED FOR CONSTRUCTION

WorleyParsons
resources & energy
39 MELROSE BOULEVARD, MELROSE ARCH, JOHANNESBURG
P.O. Box 61232, MARSHALLTOWN, 2107
TEL: +27 (0)11 218 3000
FAX: +27(0)11 218 3100
www.worleyparsons.com
WorleyParsons RSA (Pty) Ltd.

	NAME	SIGNATURE	DATE
DRAWN BY:	A.UJMA		01/12/2015
CHECKED:	D. du TOIT		01/12/2015
DESIGNER:	R. van SCHALKWYK		01/12/2015
PR ENG:	D. du TOIT Pr. No. 201170110		01/12/2015
PROJECT ENG MANAGER:	L. PADAYACHEE Pr. No.		01/12/2015
LOCAL PR ENG:			
CLIENT:			

CLIENT

MOZAMBIQUE GAS DEVELOPMENT PROJECT

Anadarko
Moçambique Área 1, Lda

PROJECT
AMA 1
RESETTLEMENT
VILLAGE

DRAWING DESCRIPTION

ROAD SIGNS AND ROAD MARKINGS
PLAN - ROAD B6

SCALE	DATE
1:1000 ORIGINAL DWG SIZE A1	DECEMBER 2015

DRAWING NUMBER	REV NO
C00290-00-CI-DLP-0013-003	0

ANADARKO DRAWING NUMBER
EA-MZ-CI0000-WOR-E05-00019-03

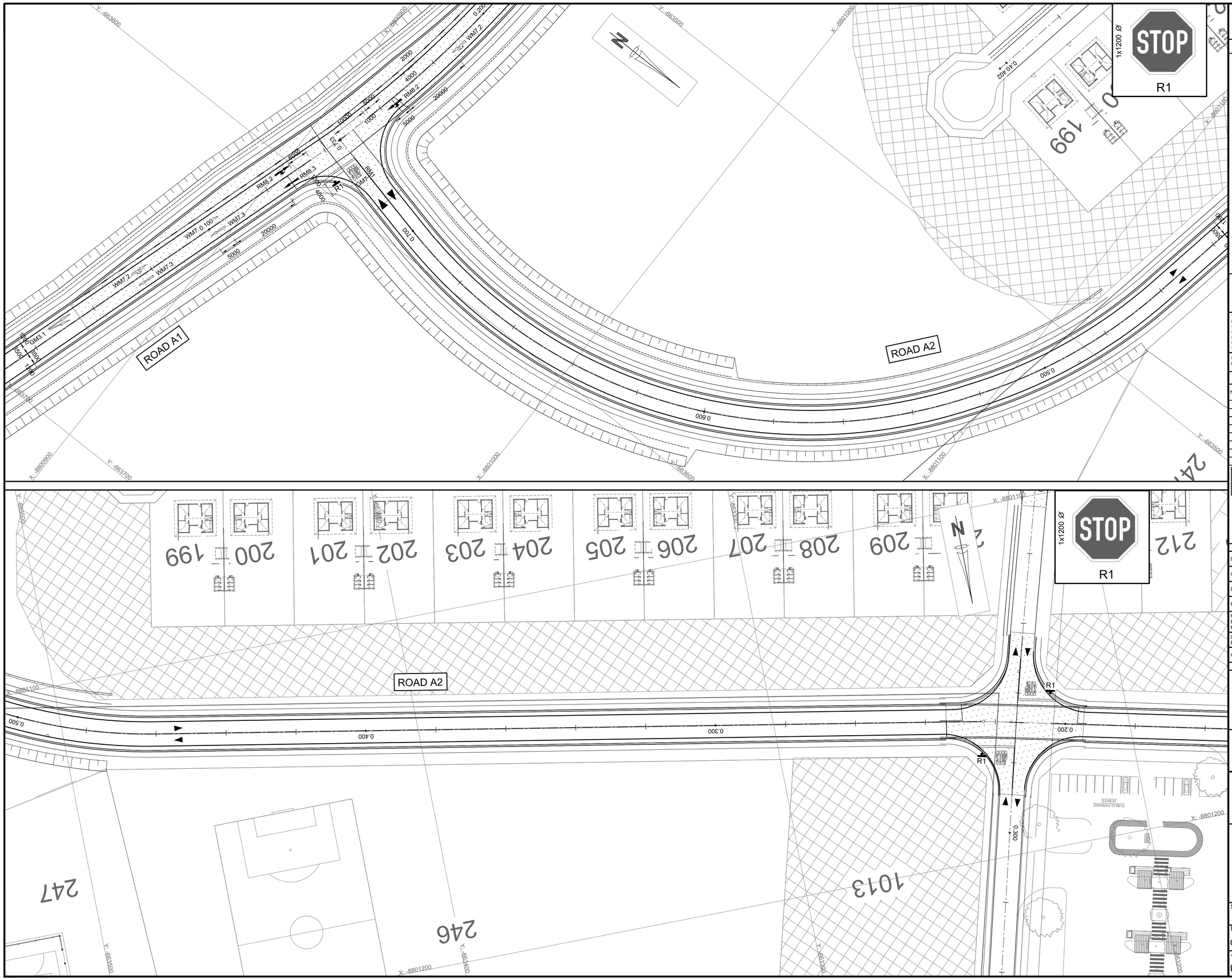

SCALE FOR REDUCED PLAN
0 10 20 30 40 50
50mm ON ORIGINAL DRAWING

NOTES

REFRENCE DWG's No:

1. EA-MZ-CI000-WOR-E05-00015-01
2. EA-MZ-CI000-WOR-E05-00015-03

ISSUED FOR CONSTRUCTION

WorleyParsons RSA retains the copyright in all intellectual property, including designs and/or documents prepared in terms of this appointment for the project covered by the appointment. The client may use the designs and/or documents for the sole purpose of their intended use on this project only subject to payment for the design having been received. Use for any other purpose, whether or not the design and/or documents have been paid for constitutes an infringement of copyright, and all rights are reserved.

All dimensions must be verified on site before the works commence. Refer any discrepancies to the Engineer.

Copyright reserved

REVISIONS

NO.	DATE	CHECKED	DONE BY	DESCRIPTION
A	04/08/15	D. d T.	A.U.	ISSUED FOR INTERNAL REVIEW
B	09/09/15	D. d T.	A.U.	ISSUED FOR DETAIL DESIGN
C	28/09/15	D. d T.	A.U.	ISSUED FOR SQUAD CHECK
D	13/10/15	D. d T.	A.U.	ISSUED FOR CLIENT REVIEW
E	30/10/15	D. d T.	A.U.	ISSUED FOR CLIENT APPROVAL
0	01/12/15	D. d T.	A.U.	ISSUED FOR CONSTRUCTION

WorleyParsons
resources & energy
39 MELROSE BOULEVARD, MELROSE ARCH, JOHANNESBURG
P.O. Box 61232, MARSHALLTOWN, 2107
TEL: +27 (0)11 218 3000
FAX: +27(0)11 218 3100
www.worleyparsons.com
WorleyParsons RSA (Pty) Ltd.

	NAME	SIGNATURE	DATE
DRAWN BY:	A.UJMA		01/12/2015
CHECKED:	D. du TOIT		01/12/2015
DESIGNER:	R. van SCHALKWYK		01/12/2015
PR ENG:	D. du TOIT Pr. No. 201170110		01/12/2015
PROJECT ENG MANAGER:	L. PADAYACHEE Pr. No.		01/12/2015
LOCAL PR ENG:			
CLIENT:			

CLIENT

MOZAMBIQUE GAS DEVELOPMENT PROJECT

Anadarko
Moçambique Área 1, Lda

PROJECT
AMA 1
RESETTLEMENT
VILLAGE

DRAWING DESCRIPTION

ROAD SIGNS AND ROAD MARKINGS
PLAN - ROAD A2, B1 AND C10
ACCESS TO SCHOOL

SHEET 1 OF 2

SCALE	DATE
1:1000 ORIGINAL DWG SIZE A1	DECEMBER 2015

DRAWING NUMBER	REV NO
C00290-00-CI-DLP-0013-002	0

ANADARKO DRAWING NUMBER

EA-MZ-CI0000-WOR-E05-00019-02

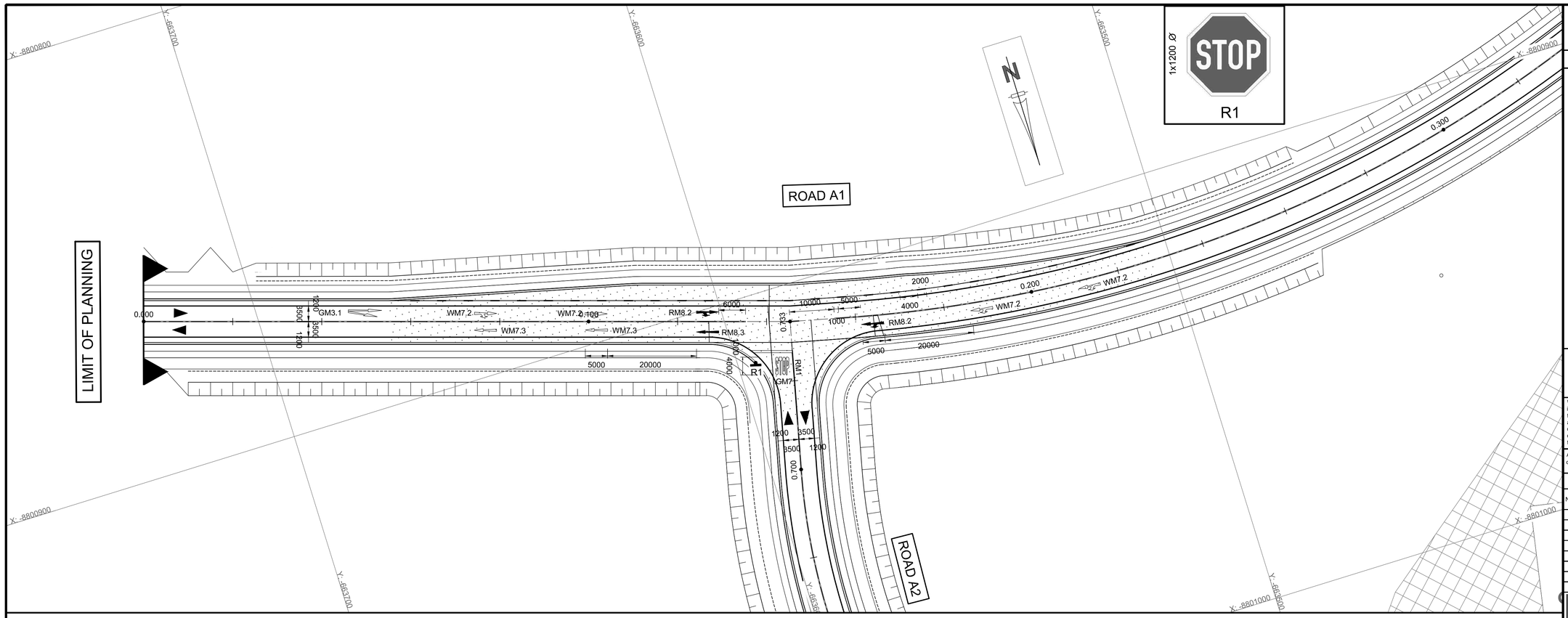

SCALE FOR REDUCED PLAN

0 10 20 30 40 50

50mm ON ORIGINAL DRAWING

NOTES

REFRENCE DWG's No:

1. EA-MZ-CI000-WOR-E05-00015-01

ISSUED FOR CONSTRUCTION

WorleyParsons RSA retains the copyright in all intellectual property, including designs and/or documents prepared in terms of this appointment for the project covered by the appointment. The client may use the designs and/or documents for the sole purpose of their intended use on this project only subject to payment for the design having been received. Use for any other purpose, whether or not the design and/or documents have been paid for constitutes an infringement of copyright, and all rights are reserved.

All dimensions must be verified on site before the works commence. Refer any discrepancies to the Engineer.

Copyright reserved

REVISIONS

NO.	DATE	CHECKED	DONE BY	DESCRIPTION
A	04/08/15	D. d T.	A.U.	ISSUED FOR INTERNAL REVIEW
B	09/09/15	D. d T.	A.U.	ISSUED FOR DETAIL DESIGN
C	28/09/15	D. d T.	A.U.	ISSUED FOR SQUAD CHECK
D	13/10/15	D. d T.	A.U.	ISSUED FOR CLIENT REVIEW
E	30/10/15	D. d T.	A.U.	ISSUED FOR CLIENT APPROVAL
0	01/12/15	D. d T.	A.U.	ISSUED FOR CONSTRUCTION

WorleyParsons
resources & energy

39 MELROSE BOULEVARD, MELROSE ARCH, JOHANNESBURG
P.O. Box 61232, MARSHALLTOWN, 2107
TEL: +27 (0)11 218 3000
FAX: +27(0)11 218 3100
www.worleyparsons.com
WorleyParsons RSA (Pty) Ltd.

	NAME	SIGNATURE	DATE
DRAWN BY:	A.UJMA		01/12/2015
CHECKED:	D. du TOIT		01/12/2015
DESIGNER:	R. van SCHALKWYK		01/12/2015
PR ENG:	D. du TOIT Pr. No. 201170110		01/12/2015
PROJECT ENG MANAGER:	L. PADAYACHEE Pr. No.		01/12/2015
LOCAL PR ENG:			
CLIENT:			

CLIENT

MOZAMBIQUE GAS DEVELOPMENT PROJECT

Anadarko Moçambique Área 1, Lda

PROJECT

AMA 1 RESETTLEMENT VILLAGE

DRAWING DESCRIPTION

ROAD SIGNS AND ROAD MARKINGS PLAN - ROAD A

SHEET 1 OF 2

SCALE	DATE
1:1000 ORIGINAL DWG SIZE A1	DECEMBER 2015

DRAWING NUMBER	REV NO
C00290-00-CI-DLP-0013-001	0

ANADARKO DRAWING NUMBER

EA-MZ-CI0000-WOR-E05-00019-01

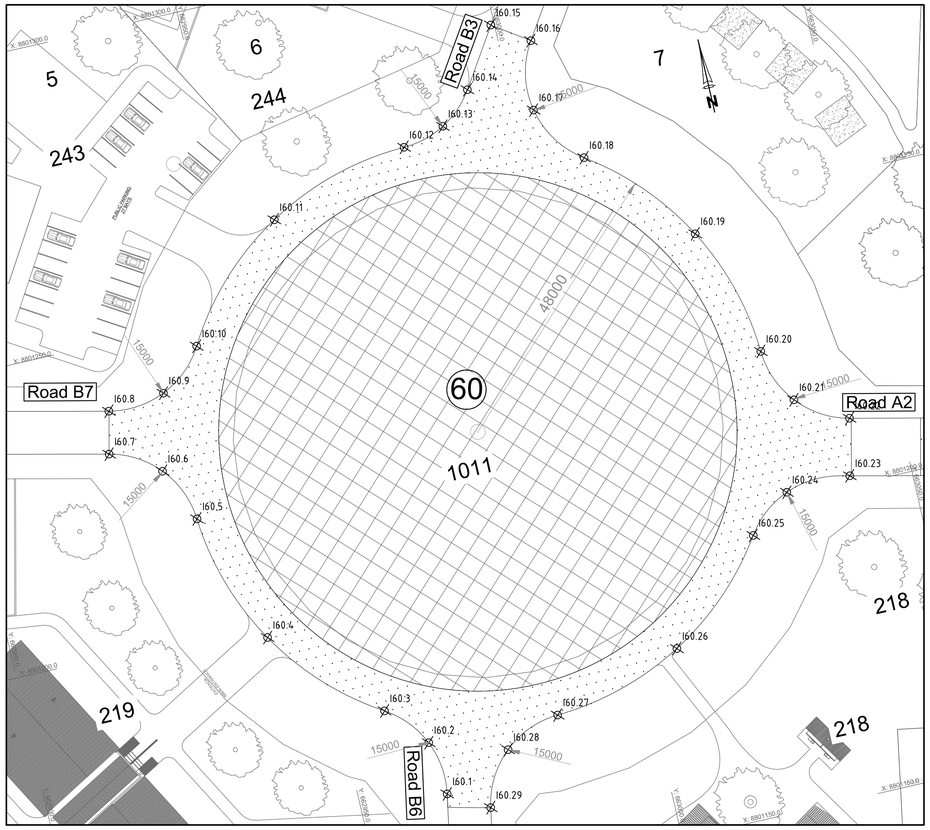

ROAD B3 & B6 - A2 & B7
CONTRACT 1 - INTERSECTION 60
SCALE 1:500

INTERSECTION SETTING OUT COORDINATES WGS84 / UTM 37S			
POINT	E	N	ELEVATION
I60.1	662964.262	8801165.740	34.419
I60.2	662963.213	8801174.567	34.444
I60.3	662957.352	8801181.251	34.469
I60.4	662941.442	8801197.208	34.385
I60.5	662934.568	8801218.668	34.267
I60.6	662930.848	8801227.504	34.169
I60.7	662922.967	8801232.191	34.075
I60.8	662924.502	8801239.021	34.076
I60.9	662933.853	8801239.889	34.124
I60.10	662940.856	8801246.148	34.172
I60.11	662957.849	8801263.395	34.166
I60.12	662981.148	8801270.155	34.159
I60.13	662988.085	8801272.068	34.118
I60.14	662993.332	8801276.991	34.077
I60.15	662999.436	8801286.409	34.014

INTERSECTION SETTING OUT COORDINATES WGS84 / UTM 37S			
POINT	E	N	ELEVATION
I60.16	663005.221	8801282.464	0.000
I60.17	663003.108	8801271.329	34.136
I60.18	663009.388	8801261.893	34.256
I60.19	663024.272	8801245.711	68.716
I60.20	663030.378	8801224.590	34.422
I60.21	663033.876	8801215.694	34.384
I60.22	663042.037	8801210.718	34.346
I60.23	663039.955	8801201.551	34.346
I60.24	663029.345	8801201.241	34.459
I60.25	663022.422	8801195.613	34.564
I60.26	663006.124	8801180.422	34.592
I60.27	662984.722	8801174.227	34.576
I60.28	662975.570	8801170.542	34.493
I60.29	662970.686	8801161.968	34.410

SCALE FOR REDUCED PLAN
0 10 20 30 40 50
50mm ON ORIGINAL DRAWING

NOTES

ISSUED FOR CONSTRUCTION

WorleyParsons RSA retains the copyright in all intellectual property, including designs and/or documents prepared in terms of this appointment for the project covered by the appointment. The client may use the designs and/or documents for the sole purpose of their intended use on this project only subject to payment for the design having been received. Use for any other purpose, whether or not the design and/or documents have been paid for constitutes an infringement of copyright, and all rights are reserved.

All dimensions must be verified on site before the works commence. Refer any discrepancies to the Engineer.

Copyright reserved

REVISIONS

NO.	DATE	CHECKED	DONE BY	DESCRIPTION
A	04/08/15	D. d T.	A.U.	ISSUED FOR INTERNAL REVIEW
B	09/09/15	D. d T.	A.U.	ISSUED FOR DETAIL DESIGN
C	28/09/15	D. d T.	A.U.	ISSUED FOR SQUAD CHECK
D	13/10/15	D. d T.	A.U.	ISSUED FOR CLIENT REVIEW
E	30/10/15	D. d T.	A.U.	ISSUED FOR CLIENT APPROVAL
0	01/12/15	D. d T.	A.U.	ISSUED FOR CONSTRUCTION

WorleyParsons
resources & energy
39 MELROSE BOULEVARD, MELROSE ARCH, JOHANNESBURG
P.O. Box 61232, MARSHALLTOWN, 2107
TEL: +27 (0)11 218 3000
FAX: +27(0)11 218 3100
www.worleyparsons.com
WorleyParsons RSA (Pty) Ltd.

	NAME	SIGNATURE	DATE
DRAWN BY:	A.UJMA		01/12/2015
CHECKED:	D. du TOIT		01/12/2015
DESIGNER:	R. van SCHALKWYK		01/12/2015
PR ENG:	D. du TOIT Pr. No. 201170110		01/12/2015
PROJECT ENG MANAGER:	L. PADAYACHEE Pr. No.		01/12/2015
LOCAL PR ENG:			
CLIENT:			

CLIENT

MOZAMBIQUE GAS DEVELOPMENT PROJECT

Anadarko Moçambique Área 1, Lda

PROJECT
AMA 1
RESETTLEMENT
VILLAGE

DRAWING DESCRIPTION

INTERSECTION 60
SETTING OUT PLAN

SCALE	DATE
AS SHOWN (ORIGINAL DWG SIZE A1)	DECEMBER 2015

DRAWING NUMBER	REV NO
C00290-00-CI-DLP-0012-019	0

ANADARKO DRAWING NUMBER
EA-MZ-CI0000-WOR-E05-00018-19

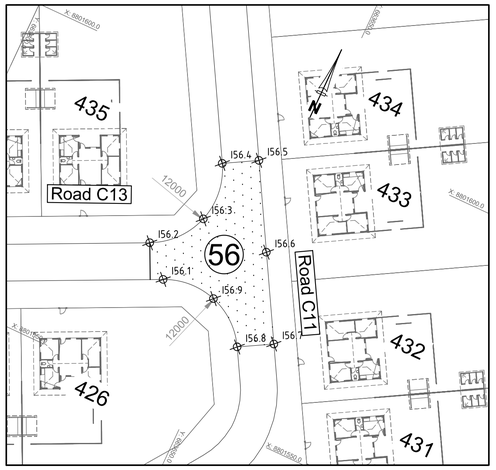

INTERSECTION SETTING OUT COORDINATES WGS84 / UTM 37S			
POINT	E	N	ELEVATION
I56.1	663637.318	8801567.788	29.824
I56.2	663632.814	8801572.283	29.656
I56.3	663639.081	8801579.521	29.612
I56.4	663638.058	8801589.040	29.581
I56.5	663643.273	8801592.006	29.401
I56.6	663650.710	8801578.938	29.485
I56.7	663658.147	8801565.869	29.569
I56.8	663652.925	8801562.914	29.749
I56.9	663646.087	8801568.419	29.778

ROAD C11 - C13
CONTRACT 2 - INTERSECTION 56
SCALE 1:500

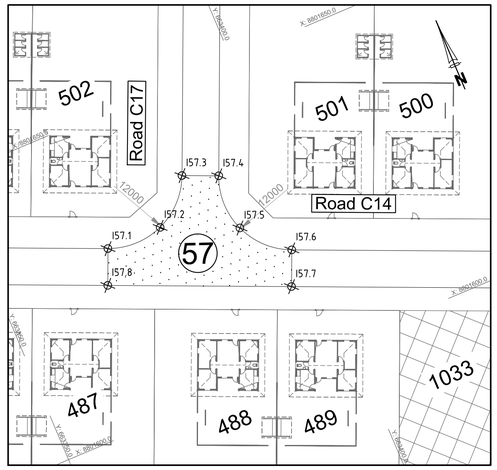

INTERSECTION SETTING OUT COORDINATES WGS84 / UTM 37S			
POINT	E	N	ELEVATION
I57.1	663369.380	8801629.195	31.091
I57.2	663378.564	8801629.055	30.975
I57.3	663385.156	8801635.451	30.875
I57.4	663390.663	8801633.067	31.055
I57.5	663390.523	8801623.884	31.000
I57.6	663396.917	8801617.293	30.940
I57.7	663394.537	8801611.785	31.120
I57.8	663367.001	8801623.687	31.271

ROAD C17 - C14
CONTRACT 2 - INTERSECTION 57
SCALE 1:500

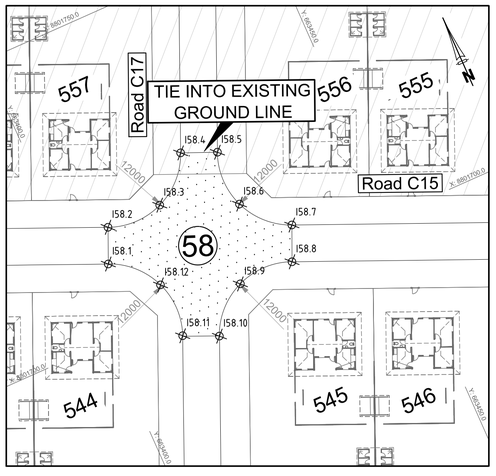

INTERSECTION SETTING OUT COORDINATES WGS84 / UTM 37S			
POINT	E	N	ELEVATION
I58.1	663404.927	8801711.505	30.698
I58.2	663407.334	8801717.002	30.518
I58.3	663416.510	8801716.871	30.488
I58.4	663423.095	8801723.264	30.473
I58.5	663428.618	8801720.918	30.653
I58.6	663428.481	8801711.728	30.614

INTERSECTION SETTING OUT COORDINATES WGS84 / UTM 37S			
POINT	E	N	ELEVATION
I58.7	663434.888	8801705.137	30.570
I58.8	663432.479	8801699.641	30.750
I58.9	663423.304	8801699.772	30.768
I58.10	663416.719	8801693.378	30.779
I58.11	663411.261	8801695.875	30.597
I58.12	663411.333	8801704.914	30.642

ROAD C17 - C15
CONTRACT 2 - INTERSECTION 58
SCALE 1:500

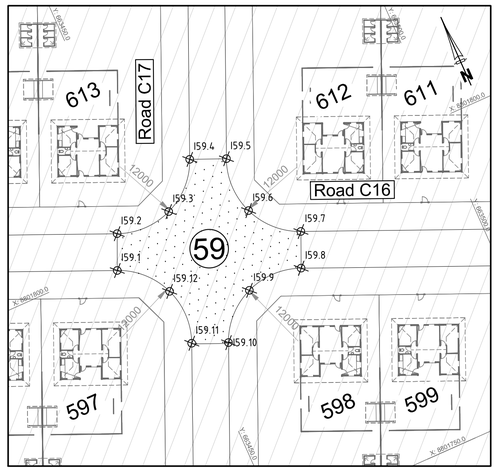

INTERSECTION SETTING OUT COORDINATES WGS84 / UTM 37S			
POINT	E	N	ELEVATION
I59.1	663442.604	8801798.713	30.211
I59.2	663445.010	8801804.209	30.030
I59.3	663454.187	8801804.079	29.974
I59.4	663460.772	8801810.471	29.928
I59.5	663466.295	8801808.126	30.107
I59.6	663466.158	8801798.935	30.035

INTERSECTION SETTING OUT COORDINATES WGS84 / UTM 37S			
POINT	E	N	ELEVATION
I59.7	663472.560	8801792.347	29.945
I59.8	663470.158	8801786.848	30.125
I59.9	663460.982	8801786.976	30.240
I59.10	663454.396	8801780.586	30.340
I59.11	663448.874	8801782.932	30.160
I59.12	663449.009	8801792.122	30.177

ROAD C17 - C16
CONTRACT 2 - INTERSECTION 59
SCALE 1:500

SCALE FOR REDUCED PLAN
0 10 20 30 40 50
50mm ON ORIGINAL DRAWING

NOTES

LEGEND
FUTURE EXPANSION

REFRENCE DWG's No:
1. EA-MZ-CI000-WOR-E05-00015-16
2. EA-MZ-CI000-WOR-E05-00015-19
3. EA-MZ-CI000-WOR-E05-00015-20

ISSUED FOR CONSTRUCTION

WorleyParsons RSA retains the copyright in all intellectual property, including designs and/or documents prepared in terms of this appointment for the project covered by the appointment. The client may use the designs and/or documents for the sole purpose of their intended use on this project only subject to payment for the design having been received. Use for any other purpose, whether or not the design and/or documents have been paid for constitutes an infringement of copyright, and all rights are reserved.

All dimensions must be verified on site before the works commence. Refer any discrepancies to the Engineer.

Copyright reserved

REVISIONS

NO.	DATE	CHECKED	DONE BY	DESCRIPTION
A	04/08/15	D. d T.	A.U.	ISSUED FOR INTERNAL REVIEW
B	09/09/15	D. d T.	A.U.	ISSUED FOR DETAIL DESIGN
C	28/09/15	D. d T.	A.U.	ISSUED FOR SQUAD CHECK
D	13/10/15	D. d T.	A.U.	ISSUED FOR CLIENT REVIEW
E	30/10/15	D. d T.	A.U.	ISSUED FOR CLIENT APPROVAL
0	01/12/15	D. d T.	A.U.	ISSUED FOR CONSTRUCTION

WorleyParsons
resources & energy

39 MELROSE BOULEVARD, MELROSE ARCH, JOHANNESBURG
P.O. Box 61232, MARSHALLTOWN, 2107
TEL: +27 (0)11 218 3000
FAX: +27(0)11 218 3100
www.worleyparsons.com
WorleyParsons RSA (Pty) Ltd.

	NAME	SIGNATURE	DATE
DRAWN BY:	A.UJMA		01/12/2015
CHECKED:	D. du TOIT		01/12/2015
DESIGNER:	R. van SCHALKWYK		01/12/2015
PR ENG:	D. du TOIT Pr. No. 201170110		01/12/2015
PROJECT ENG MANAGER:	L. PADAYACHEE Pr. No.		01/12/2015
LOCAL PR ENG:			
CLIENT:			

CLIENT

MOZAMBIQUE GAS DEVELOPMENT PROJECT

Anadarko
Moçambique Área 1, Lda

PROJECT
AMA 1
RESETTLEMENT
VILLAGE

DRAWING DESCRIPTION

INTERSECTION 56 - 59
SETTING OUT PLAN

SCALE	DATE
AS SHOWN (ORIGINAL DWG SIZE A1)	DECEMBER 2015

DRAWING NUMBER: C00290-00-CI-DLP-0012-018
REV NO: 0

ANADARKO DRAWING NUMBER: EA-MZ-CI0000-WOR-E05-00018-18

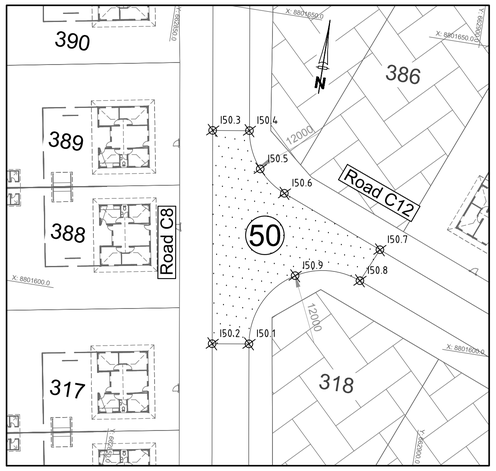

INTERSECTION SETTING OUT COORDINATES WGS84 / UTM 37S			
POINT	E	N	ELEVATION
I50.1	662870.519	8801595.941	34.873
I50.2	662864.591	8801595.016	34.693
I50.3	662859.223	8801629.408	34.522
I50.4	662865.156	8801630.307	34.702
I50.5	662867.870	8801624.407	34.696
I50.6	662872.392	8801621.108	34.690
I50.7	662889.220	8801614.441	34.673
I50.8	662886.794	8801608.949	34.494
I50.9	662876.226	8801608.096	34.659

ROAD C8 - C12
CONTRACT 2 - INTERSECTION 50
SCALE 1:500

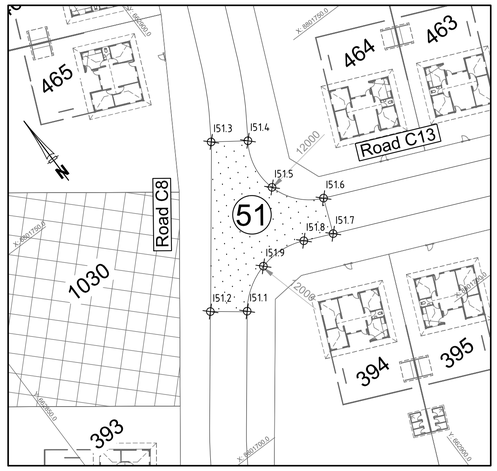

INTERSECTION SETTING OUT COORDINATES WGS84 / UTM 37S			
POINT	E	N	ELEVATION
I51.1	662886.276	8801719.168	34.220
I51.2	662881.447	8801722.732	34.040
I51.3	662898.211	8801744.762	33.904
I51.4	662903.114	8801741.304	34.085
I51.5	662901.684	8801732.860	34.128
I51.6	662907.330	8801726.400	34.218
I51.7	662905.107	8801720.824	33.991
I51.8	662900.588	8801722.785	34.045
I51.9	662892.810	8801723.437	34.133

ROAD C8 - C13
CONTRACT 2 - INTERSECTION 51
SCALE 1:500

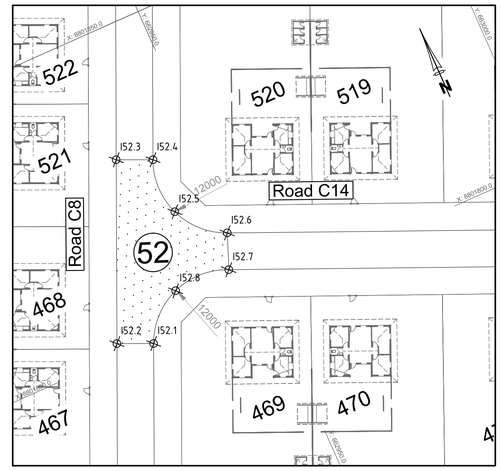

INTERSECTION SETTING OUT COORDINATES WGS84 / UTM 37S			
POINT	E	N	ELEVATION
I52.1	662930.289	8801799.471	33.772
I52.2	662924.798	8801801.891	33.592
I52.3	662936.897	8801829.343	33.446
I52.4	662942.381	8801826.908	33.626
I52.5	662942.197	8801817.702	33.674
I52.6	662948.608	8801811.069	33.722
I52.7	662946.388	8801805.492	33.542
I52.8	662937.070	8801805.872	33.657

ROAD C8 - C14
CONTRACT 2 - INTERSECTION 52
SCALE 1:500

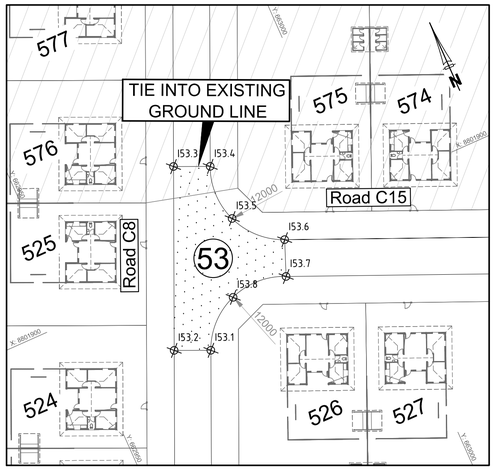

INTERSECTION SETTING OUT COORDINATES WGS84 / UTM 37S			
POINT	E	N	ELEVATION
I53.1	662968.611	8801886.423	33.307
I53.2	662963.121	8801888.844	33.127
I53.3	662975.219	8801916.296	32.980
I53.4	662980.710	8801913.876	33.160
I53.5	662980.523	8801904.647	33.211
I53.6	662986.945	8801898.015	33.311
I53.7	662984.723	8801892.439	33.081
I53.8	662975.445	8801892.845	33.193

ROAD C8 - C15
CONTRACT 2 - INTERSECTION 53
SCALE 1:500

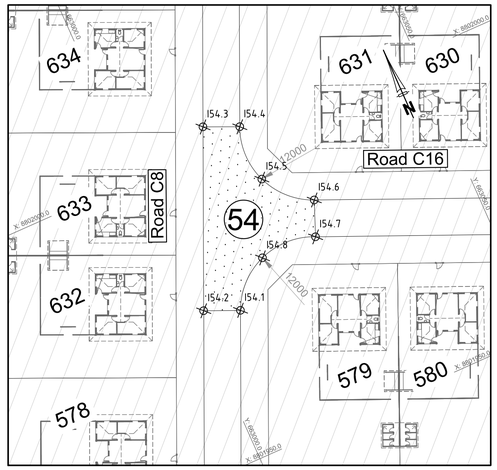

INTERSECTION SETTING OUT COORDINATES WGS84 / UTM 37S			
POINT	E	N	ELEVATION
I54.1	663006.947	8801973.408	32.842
I54.2	663001.434	8801975.777	32.662
I54.3	663013.533	8802003.229	32.515
I54.4	663019.024	8802000.810	32.695
I54.5	663018.850	8801991.545	32.748
I54.6	663025.259	8801984.949	32.801
I54.7	663023.027	8801979.377	32.620
I54.8	663013.708	8801979.759	32.732

ROAD C8 - C16
CONTRACT 2 - INTERSECTION 54
SCALE 1:500

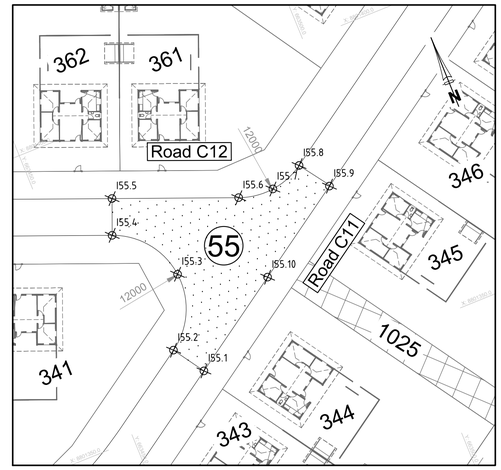

INTERSECTION SETTING OUT COORDINATES WGS84 / UTM 37S			
POINT	E	N	ELEVATION
I55.1	663464.794	8801356.147	31.220
I55.2	663461.457	8801361.133	31.400
I55.3	663466.714	8801372.379	31.421
I55.4	663459.201	8801382.262	31.442
I55.5	663461.430	8801387.833	31.262

INTERSECTION SETTING OUT COORDINATES WGS84 / UTM 37S			
POINT	E	N	ELEVATION
I55.6	663480.653	8801380.220	31.179
I55.7	663486.346	8801379.445	31.187
I55.8	663491.745	8801381.405	31.196
I55.9	663495.083	8801376.418	31.016
I55.10	663480.157	8801366.429	31.117

ROAD C12 - C11
CONTRACT 2 - INTERSECTION 55
SCALE 1:500

SCALE FOR REDUCED PLAN
0 10 20 30 40 50
50mm ON ORIGINAL DRAWING

NOTES

LEGEND

FUTURE EXPANSION

REFRENCE DWG's No:
1. EA-MZ-CI000-WOR-E05-00015-13
2. EA-MZ-CI000-WOR-E05-00015-16
3. EA-MZ-CI000-WOR-E05-00015-17
4. EA-MZ-CI000-WOR-E05-00015-18
5. EA-MZ-CI000-WOR-E05-00015-19
6. EA-MZ-CI000-WOR-E05-00015-20

ISSUED FOR CONSTRUCTION

WorleyParsons RSA retains the copyright in all intellectual property, including designs and/or documents prepared in terms of this appointment for the project covered by the appointment. The client may use the designs and/or documents for the sole purpose of their intended use on this project only subject to payment for the design having been received. Use for any other purpose, whether or not the design and/or documents have been paid for constitutes an infringement of copyright, and all rights are reserved.

All dimensions must be verified on site before the works commence. Refer any discrepancies to the Engineer.

Copyright reserved

REVISIONS

NO.	DATE	CHECKED	DONE BY	DESCRIPTION
A	04/08/15	D. d T.	A.U.	ISSUED FOR INTERNAL REVIEW
B	09/09/15	D. d T.	A.U.	ISSUED FOR DETAIL DESIGN
C	28/09/15	D. d T.	A.U.	ISSUED FOR SQUAD CHECK
D	13/10/15	D. d T.	A.U.	ISSUED FOR CLIENT REVIEW
E	30/10/15	D. d T.	A.U.	ISSUED FOR CLIENT APPROVAL
0	01/12/15	D. d T.	A.U.	ISSUED FOR CONSTRUCTION

WorleyParsons
resources & energy
39 MELROSE BOULEVARD, MELROSE ARCH, JOHANNESBURG
P.O. Box 61232, MARSHALLTOWN, 2107
TEL: +27 (0)11 218 3000
FAX: +27(0)11 218 3100
www.worleyparsons.com
WorleyParsons RSA (Pty) Ltd.

	NAME	SIGNATURE	DATE
DRAWN BY:	A.UJMA		01/12/2015
CHECKED:	D. du TOIT		01/12/2015
DESIGNER:	R. van SCHALKWYK		01/12/2015
PR ENG:	D. du TOIT Pr. No. 201170110		01/12/2015
PROJECT ENG MANAGER:	L. PADAYACHEE Pr. No.		01/12/2015
LOCAL PR ENG:			
CLIENT:			

CLIENT

MOZAMBIQUE GAS DEVELOPMENT PROJECT

Anadarko
Moçambique Área 1, Lda

PROJECT
AMA 1
RESETTLEMENT
VILLAGE

DRAWING DESCRIPTION

INTERSECTION 50 - 55
SETTING OUT PLAN

SCALE	DATE
AS SHOWN (ORIGINAL DWG SIZE A1)	DECEMBER 2015

DRAWING NUMBER	REV NO
C00290-00-CI-DLP-0012-017	0

ANADARKO DRAWING NUMBER
EA-MZ-CI0000-WOR-E05-00018-17

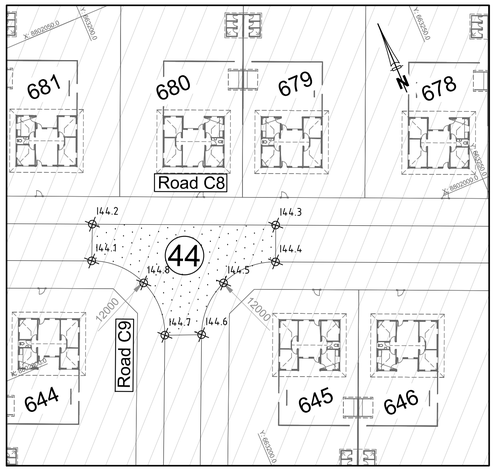

INTERSECTION SETTING OUT COORDINATES WGS84 / UTM 37S			
POINT	E	N	ELEVATION
I44.1	663186.015	8802012.627	31.596
I44.2	663188.464	8802018.105	31.415
I44.3	663215.943	8802006.273	31.263
I44.4	663213.570	8802000.763	31.443
I44.5	663204.422	8802000.904	31.460
I44.6	663197.829	8801994.548	31.481
I44.7	663192.265	8801996.798	31.661
I44.8	663192.432	8802006.012	31.627

ROAD C9 - C8
CONTRACT 2 - INTERSECTION 44
SCALE 1:500

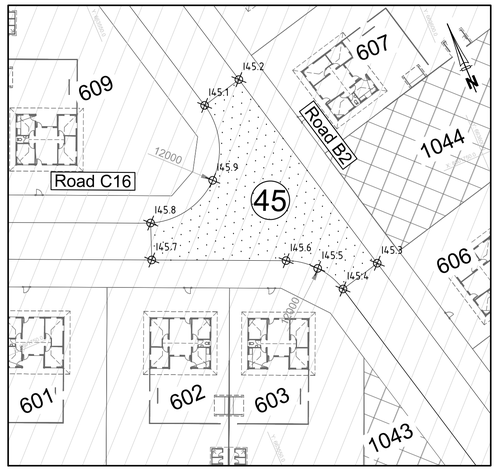

INTERSECTION SETTING OUT COORDINATES WGS84 / UTM 37S			
POINT	E	N	ELEVATION
I45.1	663561.352	8801775.095	27.811
I45.2	663568.144	8801776.788	27.836
I45.3	663577.220	8801740.381	28.325
I45.4	663570.428	8801738.688	28.497
I45.5	663567.956	8801743.395	28.332
I45.6	663563.694	8801746.572	28.446
I45.7	663543.557	8801755.244	28.866
I45.8	663545.747	8801760.866	28.675
I45.9	663557.795	8801763.325	28.243

ROAD C9 - C10
CONTRACT 2 - INTERSECTION 45
SCALE 1:500



INTERSECTION SETTING OUT COORDINATES WGS84 / UTM 37S			
POINT	E	N	ELEVATION
I46.1	663485.993	8801868.847	29.778
I46.2	663486.334	8801869.637	29.790
I46.3	663486.488	8801878.854	29.920
I46.4	663480.057	8801885.460	30.051
I46.5	663482.826	8801891.889	29.551
I46.6	663510.401	8801880.013	28.341
I46.7	663507.632	8801873.584	28.405
I46.8	663498.435	8801873.691	28.697
I46.9	663491.842	8801867.258	28.986
I46.10	663491.501	8801866.467	29.012

ROAD C9 - C11
CONTRACT 2 - INTERSECTION 46
SCALE 1:500

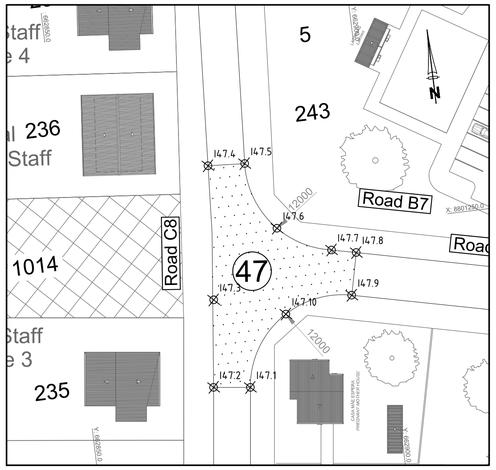

INTERSECTION SETTING OUT COORDINATES WGS84 / UTM 37S			
POINT	E	N	ELEVATION
I47.1	662876.450	8801225.776	33.858
I47.2	662870.495	8801226.511	33.678
I47.3	662872.243	8801240.683	33.749
I47.4	662873.983	8801262.514	33.860
I47.5	662879.971	8801262.140	34.040
I47.6	662883.922	8801251.030	33.974
I47.7	662892.323	8801246.416	33.929
I47.8	662896.280	8801245.507	33.947
I47.9	662894.699	8801238.688	33.947
I47.10	662883.661	8801236.944	33.907

ROAD C8 - B7
CONTRACT 2 - INTERSECTION 47
SCALE 1:500

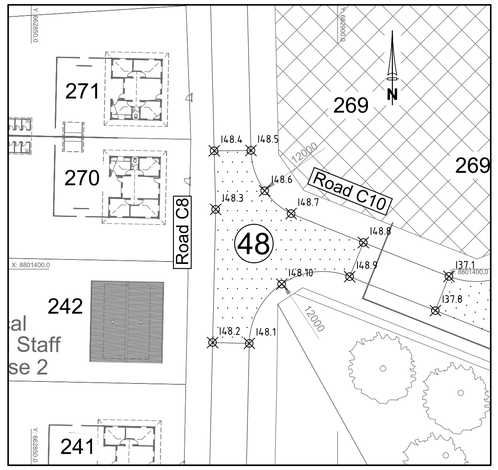

INTERSECTION SETTING OUT COORDINATES WGS84 / UTM 37S			
POINT	E	N	ELEVATION
I48.1	662885.599	8801387.877	34.672
I48.2	662879.601	8801388.020	34.492
I48.3	662880.102	8801409.737	34.602
I48.4	662879.864	8801419.304	34.650
I48.5	662885.865	8801419.360	34.830
I48.6	662888.099	8801412.769	34.734
I48.7	662892.417	8801409.056	34.655
I48.8	662904.205	8801404.335	34.563
I48.9	662901.970	8801398.767	34.743
I48.10	662890.890	8801397.544	34.707

ROAD C8 - C10
CONTRACT 2 - INTERSECTION 48
SCALE 1:500

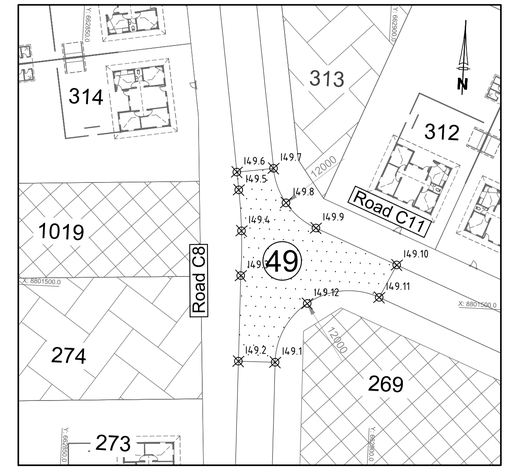

INTERSECTION SETTING OUT COORDINATES WGS84 / UTM 37S			
POINT	E	N	ELEVATION
I49.1	662884.125	8801489.481	35.084
I49.2	662878.127	8801489.332	34.904
I49.3	662877.780	8801503.308	34.918
I49.4	662877.527	8801510.614	34.920
I49.5	662876.727	8801517.262	34.919
I49.6	662876.276	8801520.148	34.918

INTERSECTION SETTING OUT COORDINATES WGS84 / UTM 37S			
POINT	E	N	ELEVATION
I49.7	662882.205	8801521.073	35.098
I49.8	662884.546	8801515.555	35.067
I49.9	662889.625	8801511.706	35.033
I49.10	662903.108	8801506.372	34.958
I49.11	662900.536	8801500.937	34.782
I49.12	662888.862	8801499.333	34.939

ROAD C8 - C11
CONTRACT 2 - INTERSECTION 49
SCALE 1:500

SCALE FOR REDUCED PLAN
0 10 20 30 40 50
50mm ON ORIGINAL DRAWING

NOTES

LEGEND
FUTURE EXPANSION

REFRENCE DWG's No:
1. EA-MZ-CI000-WOR-E05-00015-06
2. EA-MZ-CI000-WOR-E05-00015-11
3. EA-MZ-CI000-WOR-E05-00015-13
4. EA-MZ-CI000-WOR-E05-00015-14
5. EA-MZ-CI000-WOR-E05-00015-15
6. EA-MZ-CI000-WOR-E05-00015-16

ISSUED FOR CONSTRUCTION

WorleyParsons RSA retains the copyright in all intellectual property, including designs and/or documents prepared in terms of this appointment for the project covered by the appointment. The client may use the designs and/or documents for the sole purpose of their intended use on this project only subject to payment for the design having been received. Use for any other purpose, whether or not the design and/or documents have been paid for constitutes an infringement of copyright, and all rights are reserved.

All dimensions must be verified on site before the works commence. Refer any discrepancies to the Engineer.

Copyright reserved

REVISIONS

NO.	DATE	CHECKED	DONE BY	DESCRIPTION
A	04/08/15	D. d T.	A.U.	ISSUED FOR INTERNAL REVIEW
B	09/09/15	D. d T.	A.U.	ISSUED FOR DETAIL DESIGN
C	28/09/15	D. d T.	A.U.	ISSUED FOR SQUAD CHECK
D	13/10/15	D. d T.	A.U.	ISSUED FOR CLIENT REVIEW
E	30/10/15	D. d T.	A.U.	ISSUED FOR CLIENT APPROVAL
0	01/12/15	D. d T.	A.U.	ISSUED FOR CONSTRUCTION

WorleyParsons
resources & energy
39 MELROSE BOULEVARD, MELROSE ARCH, JOHANNESBURG
P.O. Box 61232, MARSHALLTOWN, 2107
TEL: +27 (0)11 218 3000
FAX: +27(0)11 218 3100
www.worleyparsons.com
WorleyParsons RSA (Pty) Ltd.

	NAME	SIGNATURE	DATE
DRAWN BY:	A.UJMA		01/12/2015
CHECKED:	D. du TOIT		01/12/2015
DESIGNER:	R. van SCHALKWYK		01/12/2015
PR ENG:	D. du TOIT Pr. No. 201170110		01/12/2015
PROJECT ENG MANAGER:	L. PADAYACHEE Pr. No.		01/12/2015
LOCAL PR ENG:			
CLIENT:			

CLIENT

MOZAMBIQUE GAS DEVELOPMENT PROJECT

Anadarko
Moçambique Área 1, Lda

PROJECT
AMA 1 RESETTLEMENT VILLAGE

DRAWING DESCRIPTION

INTERSECTION 44 - 49 SETTING OUT PLAN

SCALE	DATE
AS SHOWN (ORIGINAL DWG SIZE A1)	DECEMBER 2015

DRAWING NUMBER	REV NO
C00290-00-CI-DLP-0012-016	0

ANADARKO DRAWING NUMBER
EA-MZ-CI0000-WOR-E05-00018-16

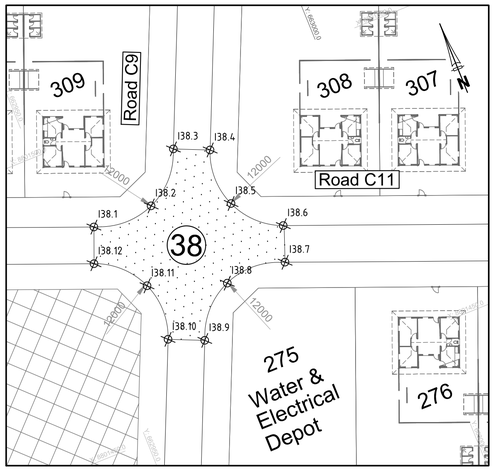

INTERSECTION SETTING OUT COORDINATES WGS84 / UTM 37S				INTERSECTION SETTING OUT COORDINATES WGS84 / UTM 37S			
POINT	E	N	ELEVATION	POINT	E	N	ELEVATION
I38.1	662955.071	8801485.794	34.302	I38.7	662981.854	8801468.788	33.732
I38.2	662965.029	8801485.494	34.148	I38.8	662971.827	8801469.158	33.842
I38.3	662971.878	8801492.756	34.000	I38.9	662964.923	8801461.872	33.952
I38.4	662977.375	8801490.352	33.820	I38.10	662959.425	8801464.276	34.132
I38.5	662977.275	8801480.972	33.868	I38.11	662959.525	8801473.656	34.118
I38.6	662983.817	8801474.442	33.913	I38.12	662952.845	8801480.242	34.123

ROAD C9 - C11
CONTRACT 2 - INTERSECTION 38
SCALE 1:500

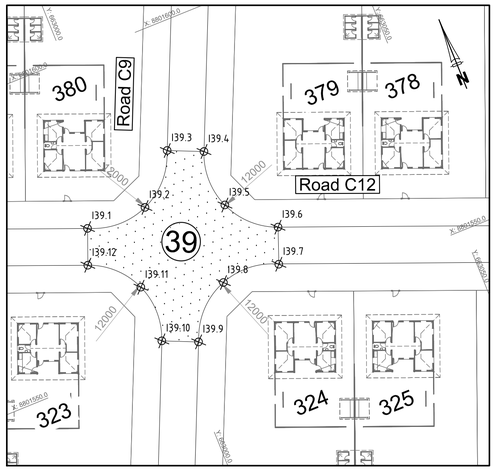

INTERSECTION SETTING OUT COORDINATES WGS84 / UTM 37S				INTERSECTION SETTING OUT COORDINATES WGS84 / UTM 37S			
POINT	E	N	ELEVATION	POINT	E	N	ELEVATION
I39.1	662993.278	8801573.232	33.844	I39.7	663020.034	8801556.122	33.318
I39.2	663003.247	8801572.905	33.717	I39.8	663010.531	8801556.743	33.431
I39.3	663010.094	8801580.158	33.594	I39.9	663003.143	8801549.285	33.547
I39.4	663015.591	8801577.755	33.414	I39.10	662997.646	8801551.689	33.727
I39.5	663015.492	8801568.378	33.464	I39.11	662997.755	8801561.075	33.687
I39.6	663022.168	8801561.791	33.510	I39.12	662991.069	8801567.653	33.664

ROAD C9 - C12
CONTRACT 2 - INTERSECTION 39
SCALE 1:500

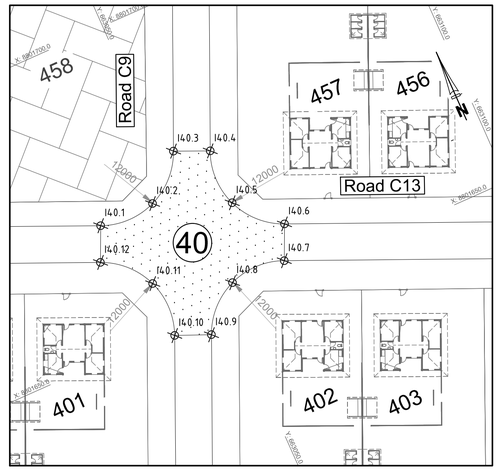

INTERSECTION SETTING OUT COORDINATES WGS84 / UTM 37S				INTERSECTION SETTING OUT COORDINATES WGS84 / UTM 37S			
POINT	E	N	ELEVATION	POINT	E	N	ELEVATION
I40.1	663036.480	8801670.374	33.369	I40.7	663061.535	8801652.965	32.886
I40.2	663045.688	8801670.231	33.260	I40.8	663052.368	8801653.123	32.983
I40.3	663052.286	8801676.655	33.147	I40.9	663045.765	8801646.764	33.094
I40.4	663057.783	8801674.251	32.967	I40.10	663040.232	8801649.088	33.275
I40.5	663057.610	8801665.052	33.018	I40.11	663040.400	8801658.286	33.226
I40.6	663064.002	8801658.435	33.066	I40.12	663034.013	8801664.904	33.189

ROAD C9 - C13
CONTRACT 2 - INTERSECTION 40
SCALE 1:500

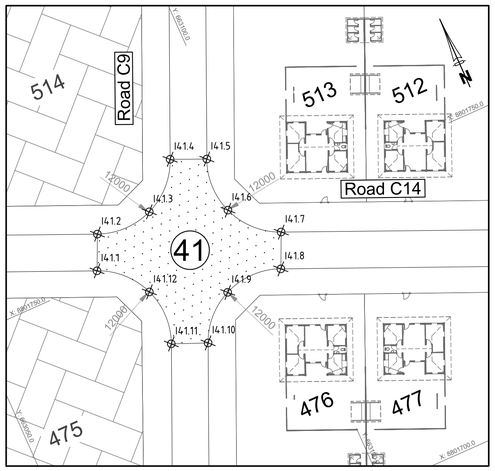

INTERSECTION SETTING OUT COORDINATES WGS84 / UTM 37S				INTERSECTION SETTING OUT COORDINATES WGS84 / UTM 37S			
POINT	E	N	ELEVATION	POINT	E	N	ELEVATION
I41.1	663071.770	8801751.297	32.787	I41.7	663101.804	8801744.852	32.662
I41.2	663074.266	8801756.755	32.966	I41.8	663099.308	8801739.394	32.483
I41.3	663083.485	8801756.628	32.858	I41.9	663089.832	8801739.414	32.585
I41.4	663090.073	8801763.078	32.746	I41.10	663083.552	8801733.186	32.693
I41.5	663095.571	8801760.674	32.566	I41.11	663078.004	8801735.475	32.874
I41.6	663095.329	8801751.656	32.615	I41.12	663078.186	8801744.677	32.823

ROAD C9 - C14
CONTRACT 2 - INTERSECTION 41
SCALE 1:500

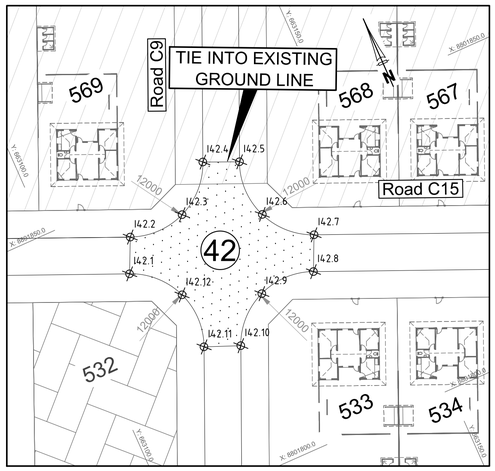

INTERSECTION SETTING OUT COORDINATES WGS84 / UTM 37S				INTERSECTION SETTING OUT COORDINATES WGS84 / UTM 37S			
POINT	E	N	ELEVATION	POINT	E	N	ELEVATION
I42.1	663109.898	8801838.541	32.377	I42.7	663139.980	8801832.120	32.255
I42.2	663112.425	8801843.985	32.557	I42.8	663137.453	8801826.676	32.075
I42.3	663121.656	8801843.876	32.450	I42.9	663128.300	8801826.816	32.175
I42.4	663128.233	8801850.353	32.341	I42.10	663121.712	8801820.462	32.288
I42.5	663133.731	8801847.950	32.161	I42.11	663116.147	8801822.712	32.469
I42.6	663133.620	8801838.594	32.211	I42.12	663116.314	8801831.925	32.416

ROAD C9 - C15
CONTRACT 2 - INTERSECTION 42
SCALE 1:500

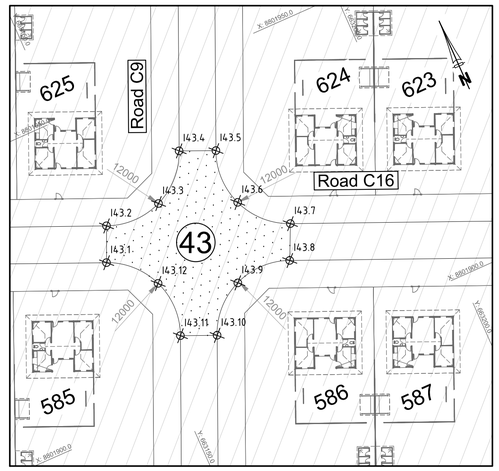

INTERSECTION SETTING OUT COORDINATES WGS84 / UTM 37S				INTERSECTION SETTING OUT COORDINATES WGS84 / UTM 37S			
POINT	E	N	ELEVATION	POINT	E	N	ELEVATION
I43.1	663148.048	8801925.544	31.968	I43.7	663178.039	8801919.164	31.848
I43.2	663150.484	8801931.028	32.148	I43.8	663175.511	8801913.719	31.669
I43.3	663159.714	8801930.920	32.045	I43.9	663166.274	8801913.825	31.771
I43.4	663166.292	8801937.396	31.937	I43.10	663159.712	8801907.371	31.885
I43.5	663171.789	8801934.993	31.757	I43.11	663154.206	8801909.755	32.065
I43.6	663171.607	8801925.818	31.804	I43.12	663154.351	8801919.023	32.010

ROAD C9 - C16
CONTRACT 2 - INTERSECTION 43
SCALE 1:500

SCALE FOR REDUCED PLAN
0 10 20 30 40 50
50mm ON ORIGINAL DRAWING

NOTES

LEGEND

FUTURE EXPANSION

REFRENCE DWG's No:
1. EA-MZ-CI000-WOR-E05-00015-14
2. EA-MZ-CI000-WOR-E05-00015-16
3. EA-MZ-CI000-WOR-E05-00015-17
4. EA-MZ-CI000-WOR-E05-00015-18
5. EA-MZ-CI000-WOR-E05-00015-19
6. EA-MZ-CI000-WOR-E05-00015-20

ISSUED FOR CONSTRUCTION

WorleyParsons RSA retains the copyright in all intellectual property, including designs and/or documents prepared in terms of this appointment for the project covered by the appointment. The client may use the designs and/or documents for the sole purpose of their intended use on this project only subject to payment for the design having been received. Use for any other purpose, whether or not the design and/or documents have been paid for constitutes an infringement of copyright, and all rights are reserved.

All dimensions must be verified on site before the works commence. Refer any discrepancies to the Engineer.

Copyright reserved

REVISIONS

NO.	DATE	CHECKED	DONE BY	DESCRIPTION
A	04/08/15	D. d T.	A.U.	ISSUED FOR INTERNAL REVIEW
B	09/09/15	D. d T.	A.U.	ISSUED FOR DETAIL DESIGN
C	28/09/15	D. d T.	A.U.	ISSUED FOR SQUAD CHECK
D	13/10/15	D. d T.	A.U.	ISSUED FOR CLIENT REVIEW
E	30/10/15	D. d T.	A.U.	ISSUED FOR CLIENT APPROVAL
0	01/12/15	D. d T.	A.U.	ISSUED FOR CONSTRUCTION

WorleyParsons
resources & energy
39 MELROSE BOULEVARD, MELROSE ARCH, JOHANNESBURG
P.O. Box 61232, MARSHALLTOWN, 2107
TEL: +27 (0)11 218 3000
FAX: +27(0)11 218 3100
www.worleyparsons.com
WorleyParsons RSA (Pty) Ltd.

	NAME	SIGNATURE	DATE
DRAWN BY:	A.UJMA		01/12/2015
CHECKED:	D. du TOIT		01/12/2015
DESIGNER:	R. van SCHALKWYK		01/12/2015
PR ENG:	D. du TOIT Pr. No. 201170110		01/12/2015
PROJECT ENG MANAGER:	L. PADAYACHEE Pr. No.		01/12/2015
LOCAL PR ENG:			
CLIENT:			

CLIENT

MOZAMBIQUE GAS DEVELOPMENT PROJECT

Anadarko
Moçambique Área 1, Lda

PROJECT
AMA 1
RESETTLEMENT
VILLAGE

DRAWING DESCRIPTION

INTERSECTION 38 - 43
SETTING OUT PLAN

SCALE: AS SHOWN (ORIGINAL DWG SIZE A1)
DATE: DECEMBER 2015
DRAWING NUMBER: C00290-00-CI-DLP-0012-015
REV NO: 0
ANADARKO DRAWING NUMBER: EA-MZ-CI0000-WOR-E05-00018-15

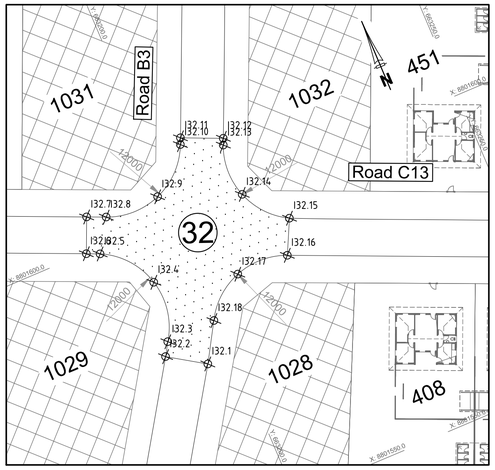

INTERSECTION SETTING OUT COORDINATES WGS84 / UTM 37S					INTERSECTION SETTING OUT COORDINATES WGS84 / UTM 37S			
POINT	E	N	ELEVATION		POINT	E	N	ELEVATION
I32.1	663195.295	8801575.501	32.398		I32.10	663205.160	8801610.207	32.234
I32.2	663189.421	8801579.291	32.397		I32.11	663205.607	8801611.215	32.229
I32.3	663190.708	8801581.387	32.385		I32.12	663212.021	8801608.411	32.229
I32.4	663192.396	8801591.205	32.329		I32.13	663211.580	8801607.401	32.234
I32.5	663186.136	8801598.895	32.277		I32.14	663211.284	8801598.776	32.192
I32.6	663184.075	8801599.807	32.281		I32.15	663216.853	8801592.183	32.152
I32.7	663186.469	8801605.308	32.461		I32.16	663214.164	8801586.754	32.334
I32.8	663189.403	8801604.036	32.447		I32.17	663205.523	8801587.078	32.349
I32.9	663198.423	8801603.820	32.342		I32.18	663198.979	8801581.633	32.365

ROAD B3 - C13
CONTRACT 2 - INTERSECTION 32
SCALE 1:500

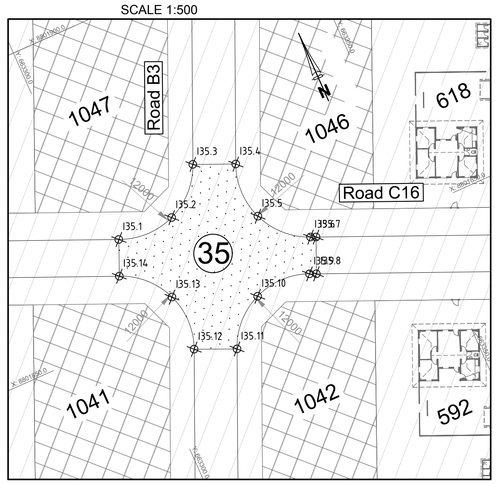

INTERSECTION SETTING OUT COORDINATES WGS84 / UTM 37S					INTERSECTION SETTING OUT COORDINATES WGS84 / UTM 37S			
POINT	E	N	ELEVATION		POINT	E	N	ELEVATION
I35.1	663303.352	8801865.205	31.136		I35.8	663330.530	8801846.970	30.990
I35.2	663312.687	8801864.965	31.025		I35.9	663329.489	8801847.419	30.997
I35.3	663319.371	8801871.486	30.913		I35.10	663320.279	8801847.517	31.024
I35.4	663325.785	8801868.683	30.913		I35.11	663313.702	8801841.038	31.053
I35.5	663325.630	8801859.440	30.864		I35.12	663307.287	8801843.842	31.053
I35.6	663332.094	8801852.833	30.815		I35.13	663307.442	8801853.084	31.004
I35.7	663332.903	8801852.481	30.810		I35.14	663300.979	8801859.694	30.956

ROAD B3 - C16
CONTRACT 2 - INTERSECTION 35
SCALE 1:500

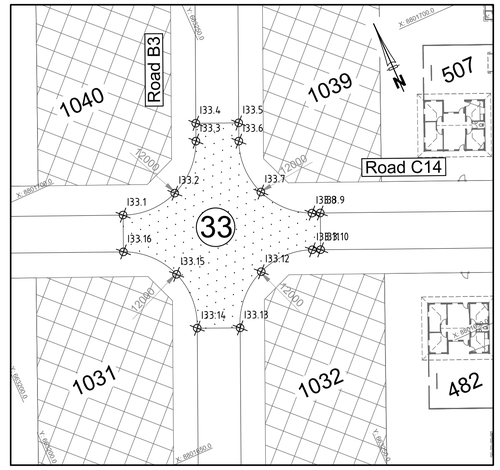

INTERSECTION SETTING OUT COORDINATES WGS84 / UTM 37S					INTERSECTION SETTING OUT COORDINATES WGS84 / UTM 37S			
POINT	E	N	ELEVATION		POINT	E	N	ELEVATION
I33.1	663227.244	8801690.632	32.012		I33.9	663256.784	8801677.864	31.708
I33.2	663236.417	8801690.474	31.905		I33.10	663254.403	8801672.356	31.888
I33.3	663243.029	8801696.829	31.796		I33.11	663253.174	8801672.887	31.895
I33.4	663244.197	8801699.502	31.782		I33.12	663244.101	8801673.021	31.914
I33.5	663250.611	8801696.698	31.782		I33.13	663237.213	8801666.046	31.937
I33.6	663249.418	8801693.965	31.794		I33.14	663230.799	8801668.849	31.937
I33.7	663249.325	8801684.935	31.755		I33.15	663231.294	8801678.249	31.885
I33.8	663255.553	8801678.395	31.715		I33.16	663224.864	8801685.124	31.833

ROAD B3 - C14
CONTRACT 2 - INTERSECTION 33
SCALE 1:500

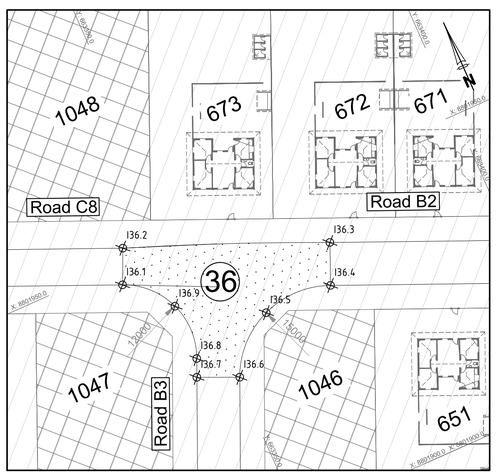

INTERSECTION SETTING OUT COORDINATES WGS84 / UTM 37S			
POINT	E	N	ELEVATION
I36.1	663339.122	8801946.702	30.726
I36.2	663341.601	8801952.170	30.545
I36.3	663372.852	8801939.253	30.755
I36.4	663370.100	8801932.817	30.925
I36.5	663358.712	8801933.014	30.777
I36.6	663350.469	8801925.154	30.629
I36.7	663344.066	8801927.985	30.627
I36.8	663345.295	8801930.796	30.613
I36.9	663345.528	8801940.036	30.669

ROAD B3 - C8 & B2
CONTRACT 2 - INTERSECTION 36
SCALE 1:500

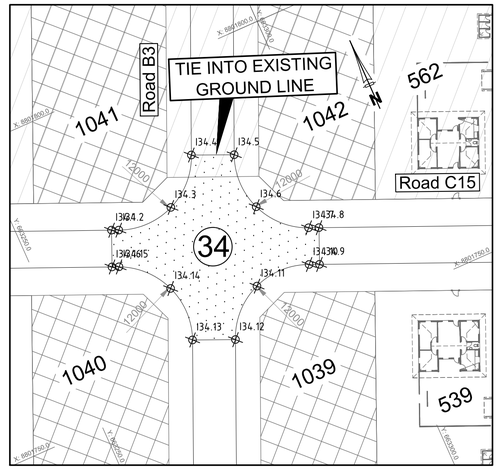

INTERSECTION SETTING OUT COORDINATES WGS84 / UTM 37S					INTERSECTION SETTING OUT COORDINATES WGS84 / UTM 37S			
POINT	E	N	ELEVATION		POINT	E	N	ELEVATION
I34.1	663264.443	8801778.528	31.578		I34.9	663293.162	8801759.630	31.430
I34.2	663265.513	8801778.067	31.572		I34.10	663291.614	8801760.296	31.440
I34.3	663274.801	8801777.982	31.462		I34.11	663282.411	8801760.541	31.466
I34.4	663281.323	8801784.439	31.353		I34.12	663275.653	8801753.990	31.493
I34.5	663287.736	8801781.634	31.353		I34.13	663269.239	8801756.794	31.493
I34.6	663287.571	8801772.422	31.307		I34.14	663269.383	8801765.910	31.448
I34.7	663293.985	8801765.804	31.260		I34.15	663263.126	8801772.562	31.394
I34.8	663295.535	8801765.140	31.250		I34.16	663262.070	8801773.017	31.398

ROAD B3 - C15
CONTRACT 2 - INTERSECTION 34
SCALE 1:500

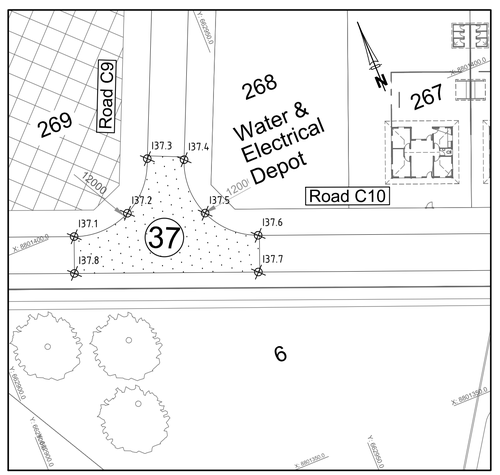

INTERSECTION SETTING OUT COORDINATES WGS84 / UTM 37S			
POINT	E	N	ELEVATION
I37.1	662918.169	8801398.811	34.463
I37.2	662927.652	8801399.092	34.427
I37.3	662934.005	8801406.138	34.402
I37.4	662939.503	8801403.734	34.222
I37.5	662939.414	8801394.355	34.240
I37.6	662946.083	8801387.768	34.262
I37.7	662943.876	8801382.189	34.442
I37.8	662915.962	8801393.232	34.643

ROAD C9 - C10
CONTRACT 2 - INTERSECTION 37
SCALE 1:500

SCALE FOR REDUCED PLAN
0 10 20 30 40 50
50mm ON ORIGINAL DRAWING

NOTES

LEGEND

FUTURE EXPANSION

REFRENCE DWG's No:
1. EA-MZ-CI000-WOR-E05-00015-12
2. EA-MZ-CI000-WOR-E05-00015-14
3. EA-MZ-CI000-WOR-E05-00015-15
4. EA-MZ-CI000-WOR-E05-00015-18
5. EA-MZ-CI000-WOR-E05-00015-19
6. EA-MZ-CI000-WOR-E05-00015-20

ISSUED FOR CONSTRUCTION

WorleyParsons RSA retains the copyright in all intellectual property, including designs and/or documents prepared in terms of this appointment for the project covered by the appointment. The client may use the designs and/or documents for the sole purpose of their intended use on this project only subject to payment for the design having been received. Use for any other purpose, whether or not the design and/or documents have been paid for constitutes an infringement of copyright, and all rights are reserved.

All dimensions must be verified on site before the works commence. Refer any discrepancies to the Engineer.

Copyright reserved

REVISIONS

NO.	DATE	CHECKED	DONE BY	DESCRIPTION
A	04/08/15	D. d T.	A.U.	ISSUED FOR INTERNAL REVIEW
B	09/09/15	D. d T.	A.U.	ISSUED FOR DETAIL DESIGN
C	28/09/15	D. d T.	A.U.	ISSUED FOR SQUAD CHECK
D	13/10/15	D. d T.	A.U.	ISSUED FOR CLIENT REVIEW
E	30/10/15	D. d T.	A.U.	ISSUED FOR CLIENT APPROVAL
0	01/12/15	D. d T.	A.U.	ISSUED FOR CONSTRUCTION

WorleyParsons
resources & energy
39 MELROSE BOULEVARD, MELROSE ARCH, JOHANNESBURG
P.O. Box 61232, MARSHALLTOWN, 2107
TEL: +27 (0)11 218 3000
FAX: +27(0)11 218 3100
www.worleyparsons.com
WorleyParsons RSA (Pty) Ltd.

	NAME	SIGNATURE	DATE
DRAWN BY:	A.UJMA		01/12/2015
CHECKED:	D. du TOIT		01/12/2015
DESIGNER:	R. van SCHALKWYK		01/12/2015
PR ENG:	D. du TOIT Pr. No. 201170110		01/12/2015
PROJECT ENG. MANAGER:	L. PADAYACHEE Pr. No.		01/12/2015
LOCAL PR ENG:			
CLIENT:			

CLIENT

MOZAMBIQUE GAS DEVELOPMENT PROJECT

Anadarko
Moçambique Área 1, Lda

PROJECT
AMA 1
RESETTLEMENT
VILLAGE

DRAWING DESCRIPTION

INTERSECTION 32 - 37
SETTING OUT PLAN

SCALE	DATE
AS SHOWN ORIGINAL DWG SIZE A1	DECEMBER 2015

DRAWING NUMBER: C00290-00-CI-DLP-0012-014
REV NO: 0

ANADARKO DRAWING NUMBER
EA-MZ-CI0000-WOR-E05-00018-14

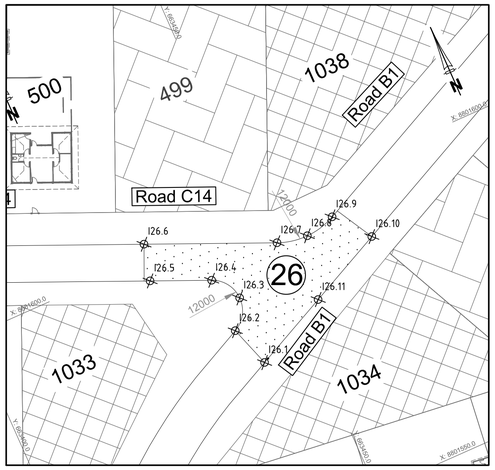

INTERSECTION SETTING OUT COORDINATES WGS84 / UTM 37S			
POINT	E	N	ELEVATION
I26.1	663441.773	8801576.639	30.806
I26.2	663439.517	8801583.320	30.801
I26.3	663442.356	8801587.927	30.838
I26.4	663439.340	8801592.419	30.875
I26.5	663430.120	8801596.405	30.925
I26.6	663431.644	8801602.282	30.750

INTERSECTION SETTING OUT COORDINATES WGS84 / UTM 37S			
POINT	E	N	ELEVATION
I26.7	663451.571	8801593.669	30.671
I26.8	663456.565	8801592.686	30.667
I26.9	663461.518	8801593.862	30.663
I26.10	663466.122	8801588.306	30.653
I26.11	663453.947	8801582.473	30.729

ROAD B1 - C14
CONTRACT 2 - INTERSECTION 26
SCALE 1:500

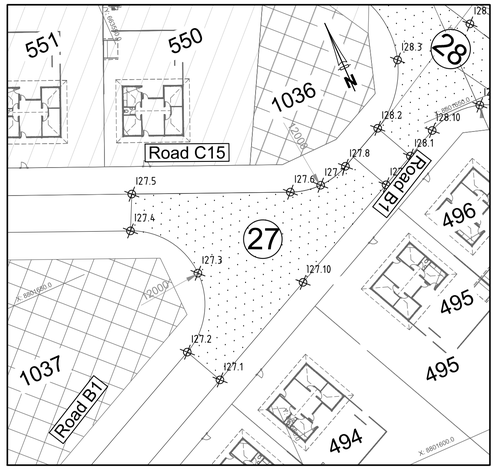

INTERSECTION SETTING OUT COORDINATES WGS84 / UTM 37S			
POINT	E	N	ELEVATION
I27.1	663543.269	8801625.272	30.168
I27.2	663540.244	8801631.585	30.168
I27.3	663547.057	8801642.648	30.187
I27.4	663539.805	8801653.428	30.206
I27.5	663542.444	8801658.825	30.024
I27.6	663566.217	8801648.589	29.851
I27.7	663571.204	8801647.613	29.803
I27.8	663576.148	8801648.788	29.754
I27.9	663580.968	8801643.336	29.746
I27.10	663562.119	8801634.304	30.049

ROAD C2 - C1
CONTRACT 2 - INTERSECTION 27
SCALE 1:500

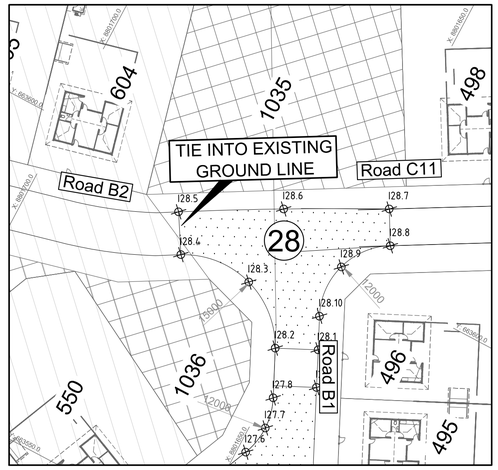

INTERSECTION SETTING OUT COORDINATES WGS84 / UTM 37S			
POINT	E	N	ELEVATION
I28.1	663586.509	8801645.991	29.563
I28.2	663583.474	8801652.304	29.567
I28.3	663590.968	8801661.173	29.249
I28.4	663589.706	8801673.062	28.935
I28.5	663595.706	8801676.671	29.186
I28.6	663604.164	8801661.751	29.410
I28.7	663612.242	8801646.527	29.049
I28.8	663607.031	8801643.562	29.285
I28.9	663600.233	8801648.995	29.314
I28.10	663591.463	8801648.365	29.397

ROAD B1 - B2 & C11
CONTRACT 2 - INTERSECTION 28
SCALE 1:500

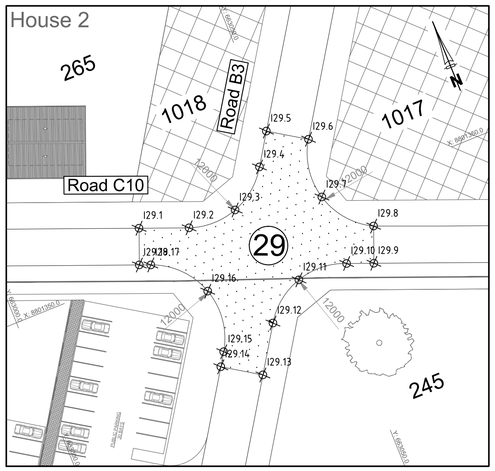

INTERSECTION SETTING OUT COORDINATES WGS84 / UTM 37S			
POINT	E	N	ELEVATION
I29.1	663024.341	8801356.809	33.700
I29.2	663031.934	8801353.808	33.647
I29.3	663039.995	8801353.704	33.632
I29.4	663046.304	8801358.723	33.615
I29.5	663049.547	8801363.724	33.588
I29.6	663055.419	8801359.913	33.588
I29.7	663053.914	8801350.352	33.613
I29.8	663059.956	8801342.791	33.639
I29.9	663057.724	8801337.150	33.472

INTERSECTION SETTING OUT COORDINATES WGS84 / UTM 37S			
POINT	E	N	ELEVATION
I29.10	663053.592	8801338.785	33.506
I29.11	663045.375	8801339.229	33.617
I29.12	663038.801	8801334.279	33.729
I29.13	663034.110	8801327.040	33.769
I29.14	663028.235	8801330.847	33.769
I29.15	663029.595	8801332.945	33.758
I29.16	663030.879	8801343.087	33.813
I29.17	663023.881	8801350.539	33.868
I29.18	663022.133	8801351.230	33.880

ROAD B3 - C10
CONTRACT 2 - INTERSECTION 29
SCALE 1:500

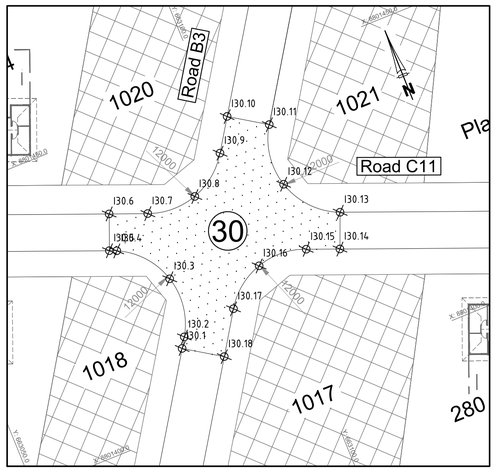

INTERSECTION SETTING OUT COORDINATES WGS84 / UTM 37S			
POINT	E	N	ELEVATION
I30.1	663081.057	8801412.271	33.319
I30.2	663082.099	8801413.879	33.311
I30.3	663083.444	8801423.569	33.266
I30.4	663077.129	8801431.039	33.221
I30.5	663076.025	8801431.509	33.218
I30.6	663078.232	8801437.088	33.398
I30.7	663084.108	8801434.764	33.366
I30.8	663092.274	8801434.483	33.267
I30.9	663098.731	8801439.502	33.169

INTERSECTION SETTING OUT COORDINATES WGS84 / UTM 37S			
POINT	E	N	ELEVATION
I30.10	663102.048	8801444.611	33.141
I30.11	663107.920	8801440.800	33.141
I30.12	663106.465	8801430.909	33.192
I30.13	663113.299	8801423.219	33,244
I30.14	663111.022	8801417.664	33,068
I30.15	663105.901	8801419.689	33.092
I30.16	663097.755	8801420.053	33.187
I30.17	663091.256	8801415.127	33.283
I30.18	663086.929	8801408.460	33.319

ROAD B3 - C11
CONTRACT 2 - INTERSECTION 30
SCALE 1:500

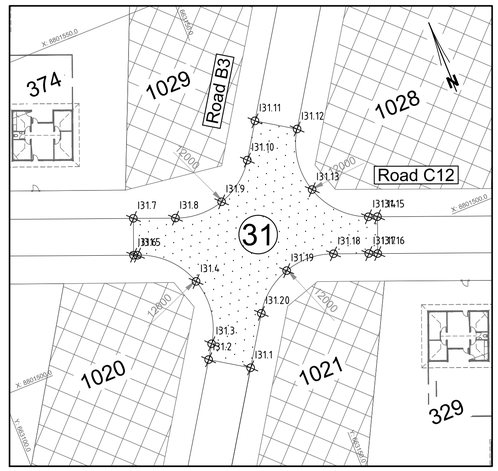

INTERSECTION SETTING OUT COORDINATES WGS84 / UTM 37S			
POINT	E	N	ELEVATION
I31.1	663139.245	8801489.062	32.874
I31.2	663133.374	8801492.873	32.874
I31.3	663134.815	8801495.094	32.862
I31.4	663136.255	8801505.475	32.812
I31.5	663128.993	8801513.032	32.764
I31.6	663128.409	8801513.264	32.767
I31.7	663130.619	8801518.842	32.947
I31.8	663137.003	8801516.313	32.897
I31.9	663144.992	8801515.957	32.809
I31.10	663151.431	8801520.698	32.722

INTERSECTION SETTING OUT COORDINATES WGS84 / UTM 37S			
POINT	E	N	ELEVATION
I31.11	663154.988	8801526.178	32.691
I31.12	663160.862	8801522.366	32.690
I31.13	663159.433	8801512.266	32.652
I31.14	663166.290	8801504.715	32.614
I31.15	663167.667	8801504.170	32.607
I31.16	663165.458	8801498.591	32.787
I31.17	663164.090	8801499.133	32.794
I31.18	663158.736	8801501.257	32.820
I31.19	663150.631	8801501.570	32.826
I31.20	663144.177	8801496.659	32.832

ROAD B3 - C12
CONTRACT 2 - INTERSECTION 31
SCALE 1:500

SCALE FOR REDUCED PLAN
0 10 20 30 40 50
50mm ON ORIGINAL DRAWING

NOTES

LEGEND

FUTURE EXPANSION

REFRENCE DWG's No:
1. EA-MZ-CI000-WOR-E05-00015-04
2. EA-MZ-CI000-WOR-E05-00015-08
3. EA-MZ-CI000-WOR-E05-00015-12
4. EA-MZ-CI000-WOR-E05-00015-16
5. EA-MZ-CI000-WOR-E05-00015-17

ISSUED FOR CONSTRUCTION

WorleyParsons RSA retains the copyright in all intellectual property, including designs and/or documents prepared in terms of this appointment for the project covered by the appointment. The client may use the designs and/or documents for the sole purpose of their intended use on this project only subject to payment for the design having been received. Use for any other purpose, whether or not the design and/or documents have been paid for constitutes an infringement of copyright, and all rights are reserved.

All dimensions must be verified on site before the works commence. Refer any discrepancies to the Engineer.

Copyright reserved

REVISIONS

NO.	DATE	CHECKED	DONE BY	DESCRIPTION
A	04/08/15	D. d T.	A.U.	ISSUED FOR INTERNAL REVIEW
B	09/09/15	D. d T.	A.U.	ISSUED FOR DETAIL DESIGN
C	28/09/15	D. d T.	A.U.	ISSUED FOR SQUAD CHECK
D	13/10/15	D. d T.	A.U.	ISSUED FOR CLIENT REVIEW
E	30/10/15	D. d T.	A.U.	ISSUED FOR CLIENT APPROVAL
0	01/12/15	D. d T.	A.U.	ISSUED FOR CONSTRUCTION

WorleyParsons
resources & energy
39 MELROSE BOULEVARD, MELROSE ARCH, JOHANNESBURG
P.O. Box 61232, MARSHALLTOWN, 2107
TEL: +27 (0)11 218 3000
FAX: +27(0)11 218 3100
www.worleyparsons.com
WorleyParsons RSA (Pty) Ltd.

	NAME	SIGNATURE	DATE
DRAWN BY:	A.UJMA		01/12/2015
CHECKED:	D. du TOIT		01/12/2015
DESIGNER:	R. van SCHALKWYK		01/12/2015
PR ENG:	D. du TOIT Pr. No. 201170110		01/12/2015
PROJECT ENG MANAGER:	L. PADAYACHEE Pr. No.		01/12/2015
LOCAL PR ENG:			
CLIENT:			

CLIENT

MOZAMBIQUE GAS DEVELOPMENT PROJECT

Anadarko
Moçambique Área 1, Lda

PROJECT
AMA 1
RESETTLEMENT VILLAGE

DRAWING DESCRIPTION

INTERSECTION 26 - 31
SETTING OUT PLAN

SCALE	DATE
AS SHOWN ORIGINAL DWG SIZE A1	DECEMBER 2015

DRAWING NUMBER	REV NO
C00290-00-CI-DLP-0012-013	0

ANADARKO DRAWING NUMBER
EA-MZ-CI0000-WOR-E05-00018-13

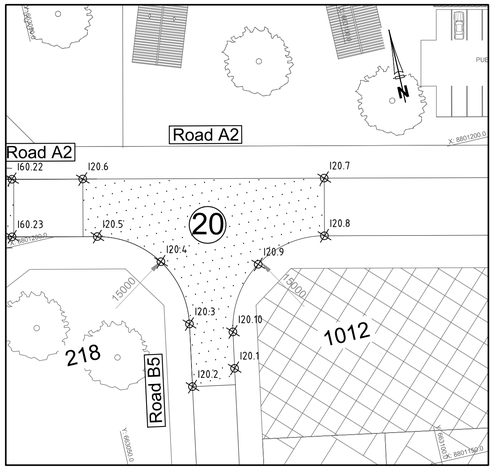

INTERSECTION SETTING OUT COORDINATES WGS84 / UTM 37S			
POINT	E	N	ELEVATION
I20.1	663070.508	8801172.487	34.005
I20.2	663063.135	8801171.121	34.173
I20.3	663064.948	8801181.186	34.215
I20.4	663062.695	8801192.123	34.244
I20.5	663053.508	8801198.473	34.275
I20.6	663053.311	8801208.157	34.289
I20.7	663091.737	8801199.430	33.967
I20.8	663089.655	8801190.263	33.960
I20.9	663078.070	8801188.155	33.993
I20.10	663071.577	8801178.332	34.026

ROAD B5 - A2
CONTRACT 1 - INTERSECTION 20
SCALE 1:500

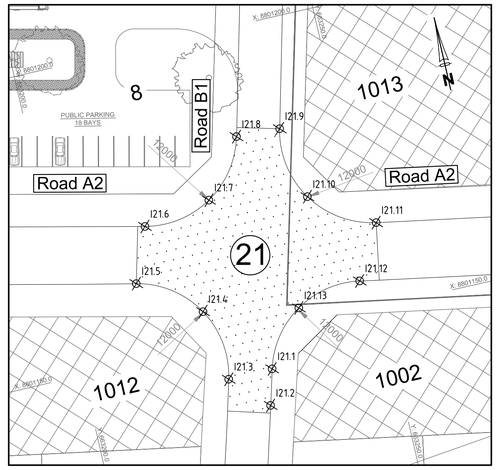

INTERSECTION SETTING OUT COORDINATES WGS84 / UTM 37S			
POINT	E	N	ELEVATION
I21.1	663230.285	8801144.053	31.603
I21.2	663228.700	8801138.300	31.631
I21.3	663223.006	8801143.997	31.790
I21.4	663221.391	8801155.693	31.826
I21.5	663211.813	8801162.597	31.864
I21.6	663215.283	8801171.369	31.844
I21.7	663226.428	8801173.197	31.718

INTERSECTION SETTING OUT COORDINATES WGS84 / UTM 37S			
POINT	E	N	ELEVATION
I21.8	663233.138	8801182.280	31.598
I21.9	663240.292	8801181.957	31.599
I21.10	663242.213	8801170.133	31.503
I21.11	663252.179	8801163.487	31.408
I21.12	663247.426	8801154.827	31.445
I21.13	663236.764	8801152.768	31.526

ROAD B1 - A2
CONTRACT 1 - INTERSECTION 21
SCALE 1:500

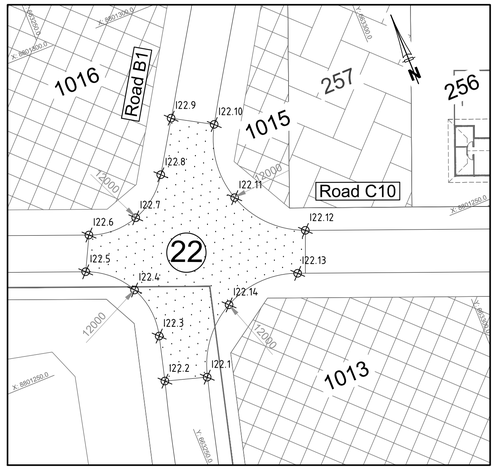

INTERSECTION SETTING OUT COORDINATES WGS84 / UTM 37S			
POINT	E	N	ELEVATION
I22.1	663255.258	8801240.365	31.852
I22.2	663248.615	8801242.353	31.852
I22.3	663250.499	8801249.526	31.879
I22.4	663249.599	8801257.995	31.910
I22.5	663243.307	8801263.734	31.941
I22.6	663246.057	8801269.098	32.117
I22.7	663254.182	8801268.845	32.104

INTERSECTION SETTING OUT COORDINATES WGS84 / UTM 37S			
POINT	E	N	ELEVATION
I22.8	663260.604	8801273.829	32.091
I22.9	663265.632	8801281.756	32.076
I22.10	663271.764	8801278.163	32.028
I22.11	663270.393	8801265.837	31.870
I22.12	663279.077	8801256.573	31.710
I22.13	663275.294	8801250.542	31.721
I22.14	663262.983	8801249.968	31.798

ROAD B1 - C10
CONTRACT 2 - INTERSECTION 22
SCALE 1:500

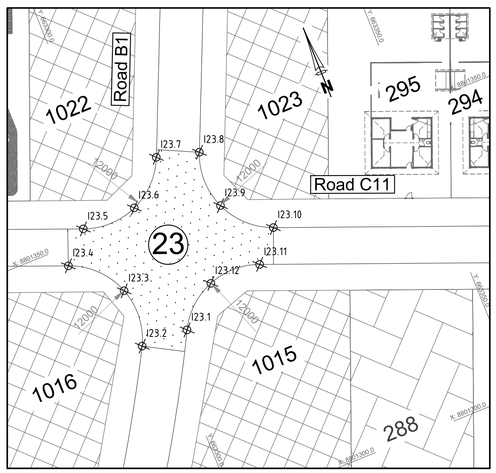

INTERSECTION SETTING OUT COORDINATES WGS84 / UTM 37S			
POINT	E	N	ELEVATION
I23.1	663303.605	8801330.079	32.247
I23.2	663295.822	8801330.368	32.242
I23.3	663296.471	8801339.837	32.233
I23.4	663289.560	8801347.030	32.225
I23.5	663294.076	8801351.696	32.394
I23.6	663303.078	8801351.766	32.321

INTERSECTION SETTING OUT COORDINATES WGS84 / UTM 37S			
POINT	E	N	ELEVATION
I23.7	663309.498	8801358.077	32.249
I23.8	663316.332	8801356.205	32.234
I23.9	663316.259	8801346.845	32.253
I23.10	663322.916	8801340.286	32.273
I23.11	663318.585	8801335.547	32.106
I23.12	663310.056	8801335.661	32.181

ROAD B1 - C11
CONTRACT 2 - INTERSECTION 23
SCALE 1:500

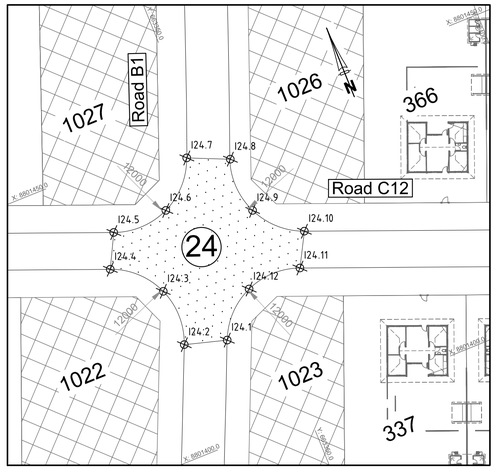

INTERSECTION SETTING OUT COORDINATES WGS84 / UTM 37S			
POINT	E	N	ELEVATION
I24.1	663342.213	8801416.037	31.921
I24.2	663335.433	8801417.966	31.926
I24.3	663335.507	8801427.323	31.955
I24.4	663328.839	8801433.889	31.986
I24.5	663331.617	8801439.242	31.803
I24.6	663340.841	8801439.403	31.778

INTERSECTION SETTING OUT COORDINATES WGS84 / UTM 37S			
POINT	E	N	ELEVATION
I24.7	663347.225	8801446.064	31.753
I24.8	663353.744	8801443.210	31.685
I24.9	663353.979	8801434.104	31.692
I24.10	663360.541	8801427.787	31.699
I24.11	663357.616	8801422.492	31.882
I24.12	663348.655	8801422.422	31.901

ROAD B1 - C12
CONTRACT 2 - INTERSECTION 24
SCALE 1:500

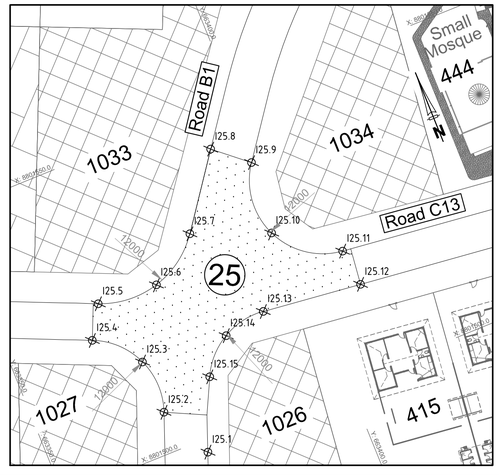

INTERSECTION SETTING OUT COORDINATES WGS84 / UTM 37S			
POINT	E	N	ELEVATION
I25.1	663374.532	8801497.843	31.415
I25.2	663370.306	8801506.563	31.392
I25.3	663370.134	8801515.480	31.426
I25.4	663363.861	8801521.815	31.460
I25.5	663367.004	8801526.991	31.279
I25.6	663376.952	8801526.289	31.252
I25.7	663385.141	8801531.980	31.224
I25.8	663393.462	8801543.521	31.143

INTERSECTION SETTING OUT COORDINATES WGS84 / UTM 37S			
POINT	E	N	ELEVATION
I25.9	663398.814	8801538.985	31.144
I25.10	663397.557	8801527.095	31.104
I25.11	663407.197	8801520.020	31.065
I25.12	663407.875	8801513.907	31.238
I25.13	663391.494	8801515.742	31.336
I25.14	663384.402	8801514.346	31.346
I25.15	663379.399	8801509.130	31.351

ROAD B1 - C13
CONTRACT 2 - INTERSECTION 25
SCALE 1:500

SCALE FOR REDUCED PLAN
0 10 20 30 40 50
50mm ON ORIGINAL DRAWING

NOTES

REFRENCE DWG's No:
1. EA-MZ-CI000-WOR-E05-00015-03
2. EA-MZ-CI000-WOR-E05-00015-04
3. EA-MZ-CI000-WOR-E05-00015-16
4. EA-MZ-CI000-WOR-E05-00015-17
5. EA-MZ-CI000-WOR-E05-00015-18

ISSUED FOR CONSTRUCTION

WorleyParsons RSA retains the copyright in all intellectual property, including designs and/or documents prepared in terms of this appointment for the project covered by the appointment. The client may use the designs and/or documents for the sole purpose of their intended use on this project only subject to payment for the design having been received. Use for any other purpose, whether or not the design and/or documents have been paid for constitutes an infringement of copyright, and all rights are reserved.

All dimensions must be verified on site before the works commence. Refer any discrepancies to the Engineer.

Copyright reserved

REVISIONS

NO.	DATE	CHECKED	DONE BY	DESCRIPTION
A	04/08/15	D. d T.	A.U.	ISSUED FOR INTERNAL REVIEW
B	09/09/15	D. d T.	A.U.	ISSUED FOR DETAIL DESIGN
C	28/09/15	D. d T.	A.U.	ISSUED FOR SQUAD CHECK
D	13/10/15	D. d T.	A.U.	ISSUED FOR CLIENT REVIEW
E	30/10/15	D. d T.	A.U.	ISSUED FOR CLIENT APPROVAL
0	01/12/15	D. d T.	A.U.	ISSUED FOR CONSTRUCTION

WorleyParsons
resources & energy
39 MELROSE BOULEVARD, MELROSE ARCH, JOHANNESBURG
P.O. Box 61232, MARSHALLTOWN, 2107
TEL: +27 (0)11 218 3000
FAX: +27(0)11 218 3100
www.worleyparsons.com
WorleyParsons RSA (Pty) Ltd.

	NAME	SIGNATURE	DATE
DRAWN BY:	A.UJMA		01/12/2015
CHECKED:	D. du TOIT		01/12/2015
DESIGNER:	R. van SCHALKWYK		01/12/2015
PR ENG:	D. du TOIT Pr. No. 201170110		01/12/2015
PROJECT ENG MANAGER:	L. PADAYACHEE Pr. No.		01/12/2015
LOCAL PR ENG:			
CLIENT:			

CLIENT

MOZAMBIQUE GAS DEVELOPMENT PROJECT

Anadarko
Moçambique Área 1, Lda

PROJECT
AMA 1
RESETTLEMENT
VILLAGE

DRAWING DESCRIPTION

INTERSECTION 20 - 25
SETTING OUT PLAN

SCALE	DATE
AS SHOWN (ORIGINAL DWG SIZE A1)	DECEMBER 2015

DRAWING NUMBER: C00290-00-CI-DLP-0012-012
REV NO: 0

ANADARKO DRAWING NUMBER: EA-MZ-CI0000-WOR-E05-00018-12

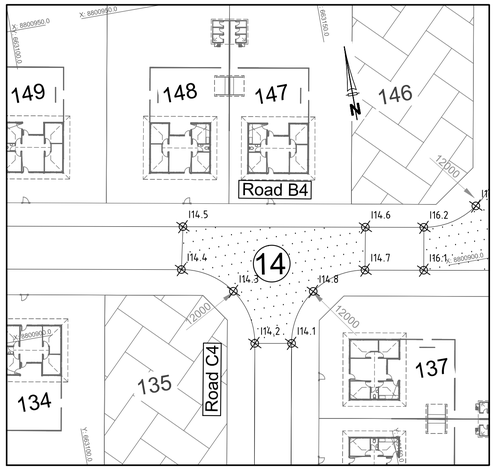

INTERSECTION SETTING OUT COORDINATES WGS84 / UTM 37S			
POINT	E	N	ELEVATIO
I14.1	663136.276	8800891.880	32.168
I14.2	663130.365	8800892.913	32.348
I14.3	663128.407	8800901.892	32.409
I14.4	663120.671	8800906.853	32.473
I14.5	663122.123	8800913.704	32.471
I14.6	663151.435	8800908.454	32.269
I14.7	663150.165	8800901.571	32.268
I14.8	663141.234	8800899.604	32.219

ROAD C4 - B4
CONTRACT 1 - INTERSECTION 14
SCALE 1:500

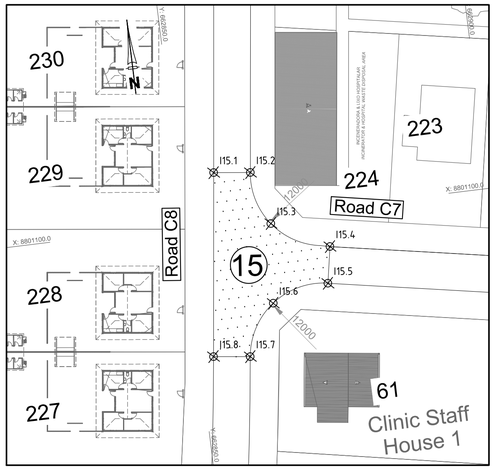

INTERSECTION SETTING OUT COORDINATES WGS84 / UTM 37S			
POINT	E	N	ELEVATION
I15.1	662855.874	8801108.009	33.083
I15.2	662861.831	8801107.299	33.263
I15.3	662864.144	8801098.625	33.329
I15.4	662873.254	8801093.724	33.418
I15.5	662872.190	8801087.819	33.238
I15.6	662862.945	8801085.672	33.188
I15.7	662858.152	8801077.479	33.149
I15.8	662852.198	8801078.214	32.969

ROAD C8 - C7
CONTRACT 1 - INTERSECTION 15
SCALE 1:500

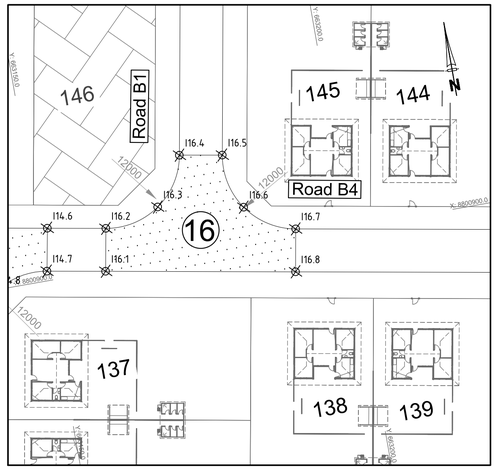

INTERSECTION SETTING OUT COORDINATES WGS84 / UTM 37S			
POINT	E	N	ELEVATION
I16.1	663159.585	8800899.884	32.204
I16.2	663160.836	8800906.771	32.203
I16.3	663169.785	8800908.734	32.212
I16.4	663174.741	8800916.442	32.235
I16.5	663181.639	8800915.251	32.060
I16.6	663183.596	8800906.270	32.020
I16.7	663191.333	8800901.309	31.992
I16.8	663190.099	8800894.419	31.992

ROAD B1 - B4
CONTRACT 1 - INTERSECTION 16
SCALE 1:500

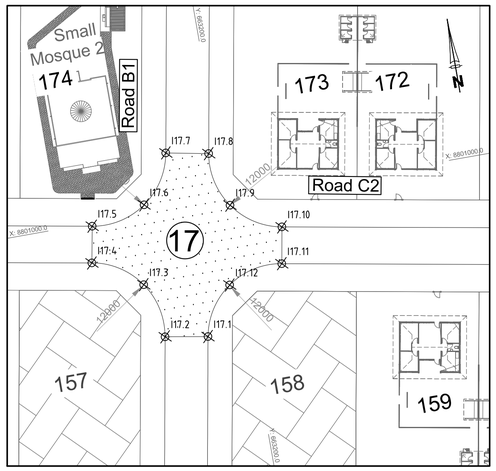

INTERSECTION SETTING OUT COORDINATES WGS84 / UTM 37S			
POINT	E	N	ELEVATION
I17.1	663193.046	8800978.512	32.270
I17.2	663186.147	8800979.693	32.445
I17.3	663184.193	8800988.668	32.434
I17.4	663176.465	8800993.632	32.431
I17.5	663177.556	8800999.532	32.611
I17.6	663186.506	8801001.490	32.517

INTERSECTION SETTING OUT COORDINATES WGS84 / UTM 37S			
POINT	E	N	ELEVATION
I17.7	663191.470	8801009.217	32.420
I17.8	663198.344	8801007.888	32.246
I17.9	663200.313	8800999.003	32.271
I17.10	663208.041	8800994.039	32.293
I17.11	663206.974	8800988.135	32.113
I17.12	663198.000	8800986.181	32.187

ROAD B1 - C2
CONTRACT 1 - INTERSECTION 17
SCALE 1:500

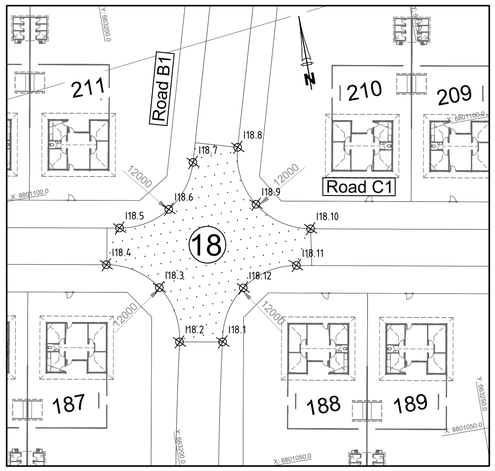

INTERSECTION SETTING OUT COORDINATES WGS84 / UTM 37S			
POINT	E	N	ELEVATION
I18.1	663210.409	8801071.323	31.954
I18.2	663203.460	8801072.555	32.140
I18.3	663201.766	8801081.835	32.122
I18.4	663193.886	8801087.023	32.123
I18.5	663197.060	8801092.548	32.279
I18.6	663205.512	8801094.159	32.140

INTERSECTION SETTING OUT COORDINATES WGS84 / UTM 37S			
POINT	E	N	ELEVATION
I18.7	663210.713	8801101.012	32.002
I18.8	663218.338	8801102.172	31.810
I18.9	663219.666	8801092.505	31.860
I18.10	663227.736	8801087.020	31.904
I18.11	663224.428	8801081.520	31.737
I18.12	663215.241	8801079.414	31.854

ROAD B1 - C1
CONTRACT 1 - INTERSECTION 18
SCALE 1:500

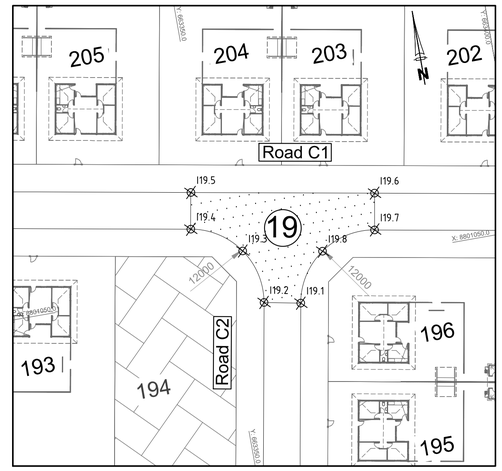

INTERSECTION SETTING OUT COORDINATES WGS84 / UTM 37S			
POINT	E	N	ELEVATION
I19.1	663361.954	8801044.552	30.937
I19.2	663356.065	8801045.706	31.117
I19.3	663354.096	8801054.579	31.073
I19.4	663346.366	8801059.546	31.045
I19.5	663347.432	8801065.451	31.225
I19.6	663376.922	8801060.137	31.057
I19.7	663375.891	8801054.226	30.877
I19.8	663366.920	8801052.274	30.900

ROAD C2 - C1
CONTRACT 1 - INTERSECTION 19
SCALE 1:500

SCALE FOR REDUCED PLAN
0 10 20 30 40 50
50mm ON ORIGINAL DRAWING

NOTES

REFRENCE DWG's No:
1. EA-MZ-CI000-WOR-E05-00015-04
2. EA-MZ-CI000-WOR-E05-00015-05
3. EA-MZ-CI000-WOR-E05-00015-08
4. EA-MZ-CI000-WOR-E05-00015-09
5. EA-MZ-CI000-WOR-E05-00015-11

ISSUED FOR CONSTRUCTION

WorleyParsons RSA retains the copyright in all intellectual property, including designs and/or documents prepared in terms of this appointment for the project covered by the appointment. The client may use the designs and/or documents for the sole purpose of their intended use on this project only subject to payment for the design having been received. Use for any other purpose, whether or not the design and/or documents have been paid for constitutes an infringement of copyright, and all rights are reserved.

All dimensions must be verified on site before the works commence. Refer any discrepancies to the Engineer.

Copyright reserved

REVISIONS

NO.	DATE	CHECKED	DONE BY	DESCRIPTION
A	04/08/15	D. d T.	A.U.	ISSUED FOR INTERNAL REVIEW
B	09/09/15	D. d T.	A.U.	ISSUED FOR DETAIL DESIGN
C	28/09/15	D. d T.	A.U.	ISSUED FOR SQUAD CHECK
D	13/10/15	D. d T.	A.U.	ISSUED FOR CLIENT REVIEW
E	30/10/15	D. d T.	A.U.	ISSUED FOR CLIENT APPROVAL
0	01/12/15	D. d T.	A.U.	ISSUED FOR CONSTRUCTION

WorleyParsons
resources & energy
39 MELROSE BOULEVARD, MELROSE ARCH, JOHANNESBURG
P.O. Box 61232, MARSHALLTOWN, 2107
TEL: +27 (0)11 218 3000
FAX: +27(0)11 218 3100
www.worleyparsons.com
WorleyParsons RSA (Pty) Ltd.

	NAME	SIGNATURE	DATE
DRAWN BY:	A.UJMA		01/12/2015
CHECKED:	D. du TOIT		01/12/2015
DESIGNER:	R. van SCHALKWYK		01/12/2015
PR ENG:	D. du TOIT Pr. No. 201170110		01/12/2015
PROJECT ENG MANAGER:	L. PADAYACHEE Pr. No.		01/12/2015
LOCAL PR ENG:			
CLIENT:			

CLIENT

MOZAMBIQUE GAS DEVELOPMENT PROJECT

Anadarko
Moçambique Área 1, Lda

PROJECT
AMA 1
RESETTLEMENT
VILLAGE

DRAWING DESCRIPTION

INTERSECTION 14 - 19
SETTING OUT PLAN

SCALE	DATE
AS SHOWN (ORIGINAL DWG SIZE A1)	DECEMBER 2015

DRAWING NUMBER	REV NO
C00290-00-CI-DLP-0012-011	0

ANADARKO DRAWING NUMBER
EA-MZ-CI0000-WOR-E05-00018-11

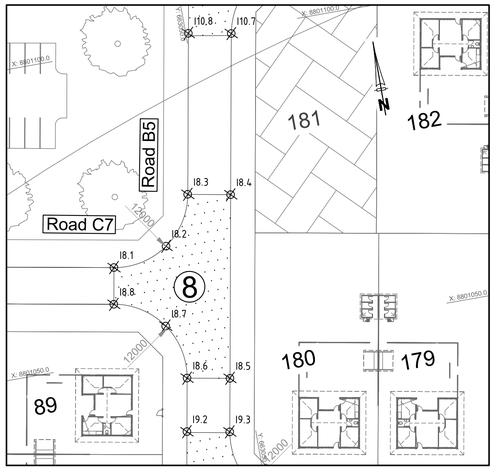

INTERSECTION SETTING OUT COORDINATES WGS84 / UTM 37S			
POINT	E	N	ELEVATION
I8.1	663031.848	8801065.152	33.858
I8.2	663040.821	8801067.106	33.820
I8.3	663045.785	8801074.834	33.783
I8.4	663052.665	8801073.543	33.608
I8.5	663047.354	8801044.068	33.488
I8.6	663040.465	8801045.309	33.663
I8.7	663038.511	8801054.283	33.669
I8.8	663030.783	8801059.247	33.678

ROAD B5 - C7
CONTRACT 1 - INTERSECTION 8
SCALE 1:500

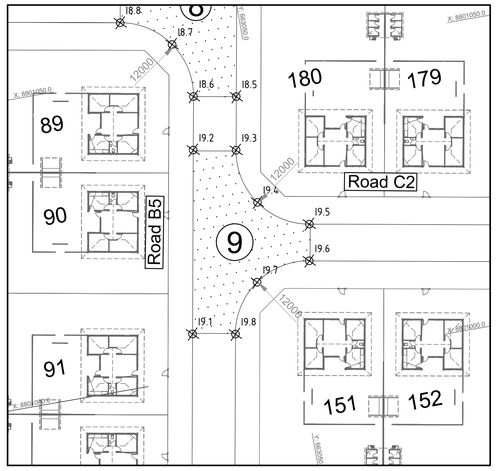

INTERSECTION SETTING OUT COORDINATES WGS84 / UTM 37S			
POINT	E	N	ELEVATION
I9.1	663033.596	8801007.184	33.509
I9.2	663038.915	8801036.709	33.628
I9.3	663045.805	8801035.467	33.454
I9.4	663047.759	8801026.493	33.429
I9.5	663055.486	8801021.529	33.407
I9.6	663054.423	8801015.625	33.227
I9.7	663045.451	8801013.663	33.278
I9.8	663040.485	8801005.943	33.334

ROAD B5 - C2
CONTRACT 1 - INTERSECTION 9
SCALE 1:500

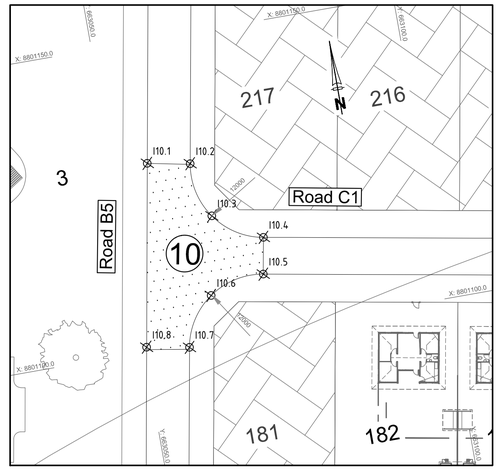

INTERSECTION SETTING OUT COORDINATES WGS84 / UTM 37S			
POINT	E	N	ELEVATION
I10.1	663055.762	8801130.203	34.007
I10.2	663062.646	8801128.937	33.832
I10.3	663064.645	8801119.929	33.779
I10.4	663072.332	8801115.024	33.725
I10.5	663071.269	8801109.119	33.545
I10.6	663062.295	8801107.165	33.629
I10.7	663057.331	8801099.437	33.712
I10.8	663050.442	8801100.678	33.887

ROAD B5 - C1
CONTRACT 1 - INTERSECTION 10
SCALE 1:500

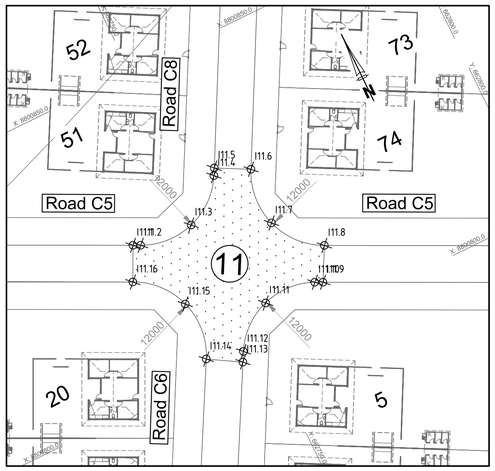

INTERSECTION SETTING OUT COORDINATES WGS84 / UTM 37S			
POINT	E	N	ELEVATION
I11.1	662738.043	8800824.385	33.444
I11.2	662739.166	8800823.836	33.464
I11.3	662748.021	8800823.192	33.489
I11.4	662754.895	8800828.810	33.514
I11.5	662755.485	8800829.912	33.507
I11.6	662760.779	8800827.090	33.687
I11.7	662759.952	8800817.749	33.788
I11.8	662766.097	8800810.665	33.899

INTERSECTION SETTING OUT COORDINATES WGS84 / UTM 37S			
POINT	E	N	ELEVATION
I11.9	662763.262	8800805.373	34.076
I11.10	662762.062	8800805.954	34.057
I11.11	662753.372	8800806.433	33.876
I11.12	662746.643	8800800.911	33.694
I11.13	662745.809	8800799.390	33.678
I11.14	662740.650	8800802.461	33.860
I11.15	662741.504	8800812.025	33.755
I11.16	662735.395	8800819.001	33.624

ROAD C6 & C8 - C5
CONTRACT 1 - INTERSECTION 11
SCALE 1:500

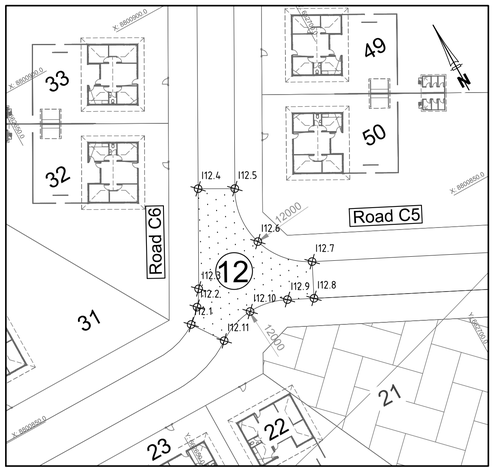

INTERSECTION SETTING OUT COORDINATES WGS84 / UTM 37S			
POINT	E	N	ELEVATION
I12.1	662659.842	8800852.332	31.728
I12.2	662662.071	8800854.342	31.743
I12.3	662663.739	8800856.837	31.758
I12.4	662671.570	8800871.162	31.825
I12.5	662676.834	8800868.284	32.005
I12.6	662675.927	8800858.895	32.065
I12.7	662682.092	8800851.748	32.157
I12.8	662679.456	8800846.358	32.337

ROAD C6 - C5
CONTRACT 1 - INTERSECTION 12
SCALE 1:500

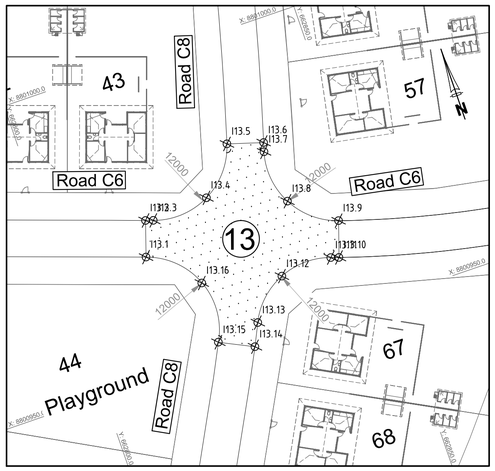

INTERSECTION SETTING OUT COORDINATES WGS84 / UTM 37S			
POINT	E	N	ELEVATION
I13.1	662813.880	8800969.159	32.889
I13.2	662815.750	8800974.839	32.709
I13.3	662816.953	8800974.443	32.714
I13.4	662826.348	8800975.093	32.776
I13.5	662832.380	8800982.320	32.840
I13.6	662838.124	8800980.587	33.020
I13.7	662837.685	8800979.127	33.021
I13.8	662838.686	8800970.270	33.021

INTERSECTION SETTING OUT COORDINATES WGS84 / UTM 37S			
POINT	E	N	ELEVATION
I13.9	662845.520	8800964.547	33.035
I13.10	662843.627	8800958.855	33.214
I13.11	662842.364	8800959.273	33.205
I13.12	662833.832	8800958.996	33.130
I13.13	662827.643	8800953.117	33.054
I13.14	662825.935	8800949.555	33.060
I13.15	662820.532	8800952.180	32.879
I13.16	662821.115	8800962.200	32.886

ROAD C8 - C6
CONTRACT 1 - INTERSECTION 13
SCALE 1:500

SCALE FOR REDUCED PLAN
0 10 20 30 40 50
50mm ON ORIGINAL DRAWING

NOTES

REFRENCE DWG's No:
1. EA-MZ-CI000-WOR-E05-00015-06
2. EA-MZ-CI000-WOR-E05-00015-08
3. EA-MZ-CI000-WOR-E05-00015-09
4. EA-MZ-CI000-WOR-E05-00015-10
5. EA-MZ-CI000-WOR-E05-00015-11

ISSUED FOR CONSTRUCTION

WorleyParsons RSA retains the copyright in all intellectual property, including designs and/or documents prepared in terms of this appointment for the project covered by the appointment. The client may use the designs and/or documents for the sole purpose of their intended use on this project only subject to payment for the design having been received. Use for any other purpose, whether or not the design and/or documents have been paid for constitutes an infringement of copyright, and all rights are reserved.

All dimensions must be verified on site before the works commence. Refer any discrepancies to the Engineer.

Copyright reserved

REVISIONS

NO.	DATE	CHECKED	DONE BY	DESCRIPTION
A	04/08/15	D. d T.	A.U.	ISSUED FOR INTERNAL REVIEW
B	09/09/15	D. d T.	A.U.	ISSUED FOR DETAIL DESIGN
C	28/09/15	D. d T.	A.U.	ISSUED FOR SQUAD CHECK
D	13/10/15	D. d T.	A.U.	ISSUED FOR CLIENT REVIEW
E	30/10/15	D. d T.	A.U.	ISSUED FOR CLIENT APPROVAL
0	01/12/15	D. d T.	A.U.	ISSUED FOR CONSTRUCTION

WorleyParsons
resources & energy
39 MELROSE BOULEVARD, MELROSE ARCH, JOHANNESBURG
P.O. Box 61232, MARSHALLTOWN, 2107
TEL: +27 (0)11 218 3000
FAX: +27(0)11 218 3100
www.worleyparsons.com
WorleyParsons RSA (Pty) Ltd.

	NAME	SIGNATURE	DATE
DRAWN BY:	A.UJMA		01/12/2015
CHECKED:	D. du TOIT		01/12/2015
DESIGNER:	R. van SCHALKWYK		01/12/2015
PR ENG:	D. du TOIT Pr. No. 201170110		01/12/2015
PROJECT ENG MANAGER:	L. PADAYACHEE Pr. No.		01/12/2015
LOCAL PR ENG:			
CLIENT:			

CLIENT

MOZAMBIQUE GAS DEVELOPMENT PROJECT

Anadarko
Moçambique Área 1, Lda

PROJECT
AMA 1
RESETTLEMENT
VILLAGE

DRAWING DESCRIPTION

INTERSECTION 8 - 13
SETTING OUT PLAN

SCALE	DATE
AS SHOWN (ORIGINAL DWG SIZE A1)	DECEMBER 2015

DRAWING NUMBER	REV NO
C00290-00-CI-DLP-0012-010	0

ANADARKO DRAWING NUMBER
EA-MZ-CI0000-WOR-E05-00018-10

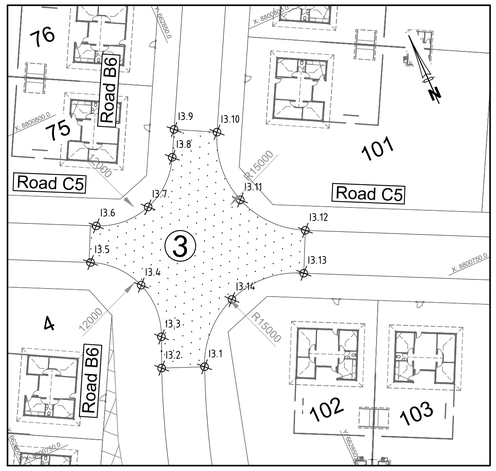

INTERSECTION SETTING OUT COORDINATES WGS84 / UTM 37S			
POINT	E	N	ELEVATION
I3.1	662834.009	8800752.580	34.607
I3.2	662827.528	8800755.226	34.608
I3.3	662829.583	8800759.894	34.617
I3.4	662829.986	8800768.939	34.631
I3.5	662823.954	8800775.691	34.636
I3.6	662827.220	8800780.772	34.460
I3.7.	662836.206	8800780.141	34.510

INTERSECTION SETTING OUT COORDINATES WGS84 / UTM 37S			
POINT	E	N	ELEVATION
I3.8	662843.099	8800785.940	34.561
I3.9	662845.219	8800789.979	34.541
I3.10	662851.430	8800786.718	34.535
I3.11	662850.425	8800775.061	34.594
I3.12	662858.099	8800766.228	34.623
I3.13	662855.023	8800759.939	34.448
I3.14	662842.568	8800760.803	34.529

ROAD B6 - C5
CONTRACT 1 - INTERSECTION 3
SCALE 1:500

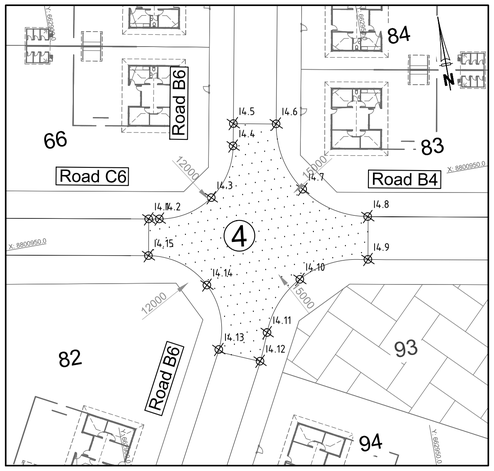

INTERSECTION SETTING OUT COORDINATES WGS84 / UTM 37S			
POINT	E	N	ELEVATION
I4.1	662910.723	8800951.075	33.539
I4.2	662912.425	8800950.768	33.552
I4.3	662921.381	8800952.709	33.638
I4.4	662926.356	8800960.405	33.725
I4.5	662927.019	8800963.996	33.725
I4.6	662933.904	8800962.732	33.725
I4.7	662936.321	8800951.471	33.646
I4.8	662945.986	8800945.248	33.555

INTERSECTION SETTING OUT COORDINATES WGS84 / UTM 37S			
POINT	E	N	ELEVATION
I4.9	662944.802	8800938.349	33.555
I4.10	662933.303	8800937.069	33.647
I4.11	662926.534	8800929.455	33.751
I4.12	662924.589	8800925.051	33.760
I4.13	662918.290	8800928.103	33.760
I4.14	662918.208	8800938.792	33.747
I4.15	662909.634	8800945.175	33.719

ROAD B6 - C6 & B4
CONTRACT 1 - INTERSECTION 4
SCALE 1:500

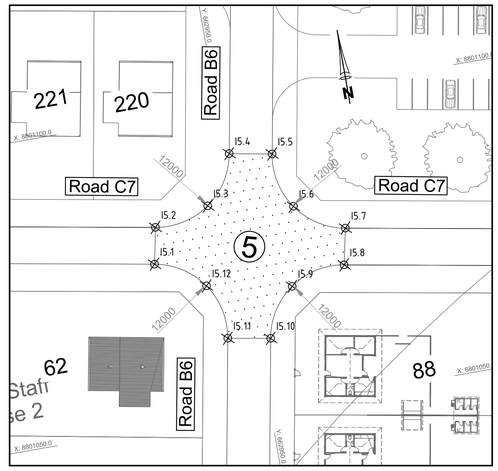

INTERSECTION SETTING OUT COORDINATES WGS84 / UTM 37S			
POINT	E	N	ELEVATION
I5.1	662935.516	8801076.410	33.853
I5.2	662936.707	8801082.293	34.035
I5.3	662945.715	8801084.270	34.088
I5.4	662950.659	8801092.055	34.119
I5.5	662957.543	8801090.783	34.119
I5.6	662959.474	8801081.781	34.120

INTERSECTION SETTING OUT COORDINATES WGS84 / UTM 37S			
POINT	E	N	ELEVATION
I5.7	662967.216	8801076.796	34.104
I5.8	662965.977	8801070.922	33.924
I5.9	662957.033	8801068.947	33.969
I5.10	662952.079	8801061.187	33.999
I5.11	662945.189	8801062.422	33.999
I5.12	662943.258	8801071.444	33.936

ROAD B6 - C7
CONTRACT 1 - INTERSECTION 5
SCALE 1:500

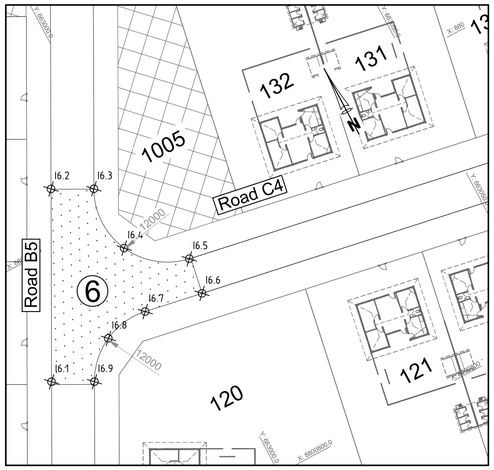

INTERSECTION SETTING OUT COORDINATES WGS84 / UTM 37S			
POINT	E	N	ELEVATION
I6.1	662974.240	8800830.663	33.725
I6.2	662988.938	8800858.498	33.570
I6.3	662995.128	8800855.230	33.395
I6.4	662994.951	8800844.371	33.358
I6.5	663003.513	8800837.835	33.308
I6.6	663002.704	8800831.883	33.123
I6.7	662993.111	8800833.612	33.278
I6.8	662985.755	8800832.564	33.417
I6.9	662980.430	8800827.395	33.550

ROAD B5 - C4
CONTRACT 1 - INTERSECTION 6
SCALE 1:500

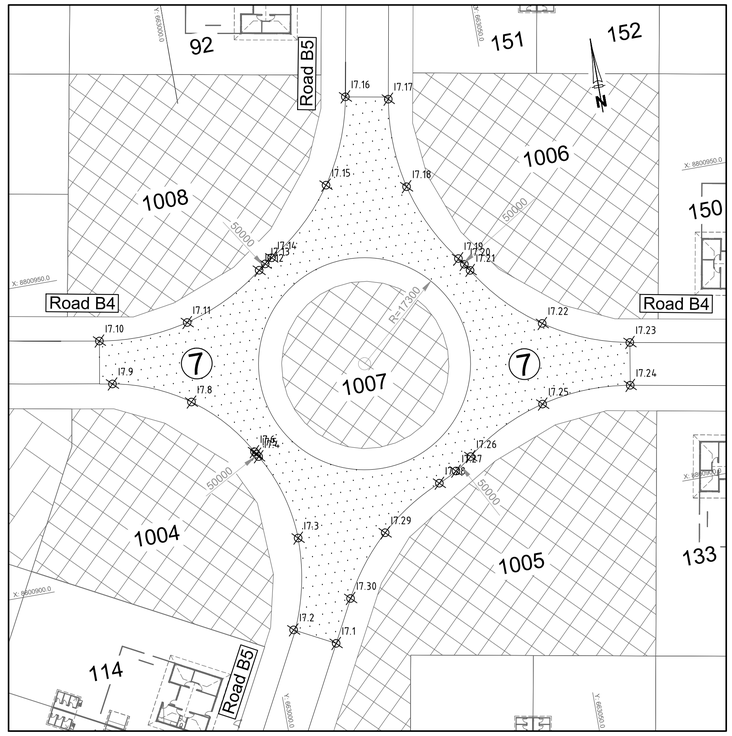

INTERSECTION SETTING OUT COORDINATES WGS84 / UTM 37S			
POINT	E	N	ELEVATION
I7.1	663010.158	8800883.729	33.236
I7.2	663003.707	8800887.105	33.438
I7.3	663007.037	8800901.736	33.364
I7.4	663002.987	8800915.942	33.290
I7.5	663002.715	8800916.407	33.290
I7.6	663002.456	8800916.868	33.290
I7.8	662993.737	8800926.624	33.312
I7.9	662981.555	8800931.767	33.334
I7.10	662980.674	8800939.036	33.347
I7.11	662995.305	8800939.526	33.312
I7.12	663008.354	8800945.878	33.278
I7.13	663009.506	8800946.734	33.274
I7.14	663010.719	8800947.524	33.271
I7.15	663021.514	8800957.673	33.319
I7.16	663027.133	8800971.316	33.367
I7.17	663033.959	8800969.726	33.187
I7.18	663034.423	8800955.135	33.155
I7.19	663040.717	8800942.108	33.123
I7.20	663041.525	8800941.018	33.117
I7.21	663042.269	8800939.883	33.106

INTERSECTION SETTING OUT COORDINATES WGS84 / UTM 37S			
POINT	E	N	ELEVATION
I7.22	663052.357	8800929.308	32.983
I7.23	663065.908	8800923.771	32.861
I7.24	663064.746	8800916.868	32.860
I7.25	663050.135	8800916.343	32.984
I7.26	663037.074	8800909.944	33.107
I7.27	663034.308	8800908.035	33.127
I7.28	663031.293	8800906.548	33.140
I7.29	663021.168	8800900.120	33.176
I7.30	663013.752	8800890.547	33.212

ROAD B5 - B4
CONTRACT 1 - INTERSECTION 7
SCALE 1:500

SCALE FOR REDUCED PLAN
0 10 20 30 40 50
50mm ON ORIGINAL DRAWING

NOTES

REFRENCE DWG's No:
1. EA-MZ-CI000-WOR-E05-00015-06
2. EA-MZ-CI000-WOR-E05-00015-07

ISSUED FOR CONSTRUCTION

WorleyParsons RSA retains the copyright in all intellectual property, including designs and/or documents prepared in terms of this appointment for the project covered by the appointment. The client may use the designs and/or documents for the sole purpose of their intended use on this project only subject to payment for the design having been received. Use for any other purpose, whether or not the design and/or documents have been paid for constitutes an infringement of copyright, and all rights are reserved.

All dimensions must be verified on site before the works commence. Refer any discrepancies to the Engineer.

Copyright reserved

REVISIONS

NO.	DATE	CHECKED	DONE BY	DESCRIPTION
A	04/08/15	D. d T.	A.U.	ISSUED FOR INTERNAL REVIEW
B	09/09/15	D. d T.	A.U.	ISSUED FOR DETAIL DESIGN
C	28/09/15	D. d T.	A.U.	ISSUED FOR SQUAD CHECK
D	13/10/15	D. d T.	A.U.	ISSUED FOR CLIENT REVIEW
E	30/10/15	D. d T.	A.U.	ISSUED FOR CLIENT APPROVAL
0	01/12/15	D. d T.	A.U.	ISSUED FOR CONSTRUCTION

WorleyParsons
resources & energy
39 MELROSE BOULEVARD, MELROSE ARCH, JOHANNESBURG
P.O. Box 61232, MARSHALLTOWN, 2107
TEL: +27 (0)11 218 3000
FAX: +27(0)11 218 3100
www.worleyparsons.com
WorleyParsons RSA (Pty) Ltd.

	NAME	SIGNATURE	DATE
DRAWN BY:	A.UJMA		01/12/2015
CHECKED:	D. du TOIT		01/12/2015
DESIGNER:	R. van SCHALKWYK		01/12/2015
PR ENG:	D. du TOIT Pr. No. 201170110		01/12/2015
PROJECT ENG MANAGER:	L. PADAYACHEE Pr. No.		01/12/2015
LOCAL PR ENG:			
CLIENT:			

CLIENT

MOZAMBIQUE GAS DEVELOPMENT PROJECT

Anadarko
Moçambique Área 1, Lda

PROJECT
AMA 1
RESETTLEMENT
VILLAGE

DRAWING DESCRIPTION

INTERSECTION 3 - 7
SETTING OUT PLAN

SCALE	DATE
AS SHOWN (ORIGINAL DWG SIZE A1)	DECEMBER 2015

DRAWING NUMBER	REV NO
C00290-00-CI-DLP-0012-009	0

ANADARKO DRAWING NUMBER
EA-MZ-CI0000-WOR-E05-00018-09

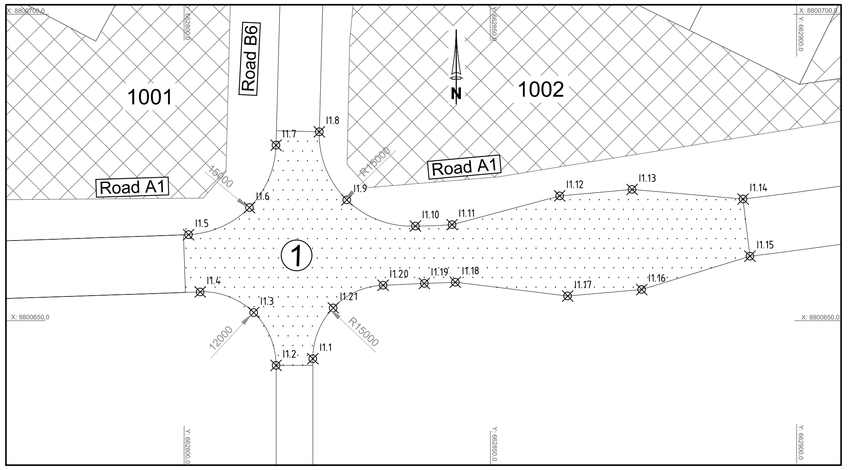

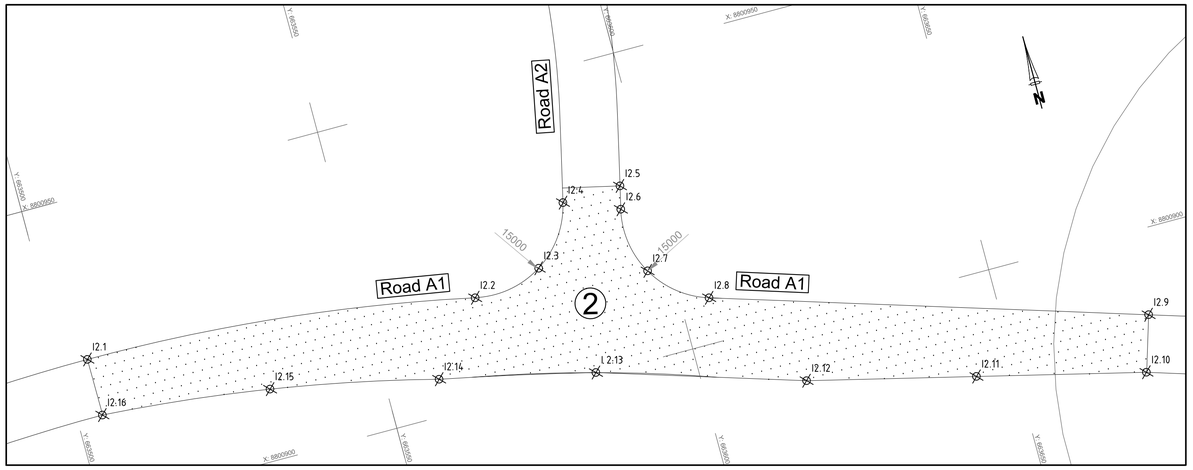

INTERSECTION SETTING OUT COORDINATES WGS84 / UTM 37S			
POINT	E	N	ELEVATION
I1.1	662821.023	8800643.785	34.199
I1.2	662815.023	8800642.697	34.375
I1.3	662811.365	8800651.315	34.339
I1.4	662802.621	8800654.681	34.303
I1.5	662800.727	8800664.023	34.300
I1.6	662810.667	8800668.439	34.302
I1.7	662815.018	8800678.622	34.304
I1.8	662822.079	8800680.809	34.314
I1.9	662826.572	8800669.703	34.338
I1.10	662837.766	8800665.429	34.362
I1.11	662843.747	8800665.661	34.372

INTERSECTION SETTING OUT COORDINATES WGS84 / UTM 37S			
POINT	E	N	ELEVATION
I1.12	662861.313	8800670.360	34.296
I1.13	662873.136	8800671.403	34.299
I1.14	662891.254	8800669.847	34.384
I1.15	662892.380	8800660.515	34.384
I1.16	662874.708	8800655.078	34.299
I1.17	662862.624	8800654.012	34.295
I1.18	662844.273	8800656.270	34.372
I1.19	662839.216	8800656.072	34.368
I1.20	662832.491	8800655.773	34.360
I1.21	662824.352	8800652.080	34.279

ROAD B6 - A1
CONTRACT 1 - INTERSECTION 1
SCALE 1:500

INTERSECTION SETTING OUT COORDINATES WGS84 / UTM 37S			
POINT	E	N	ELEVATION
I 2.13	663583.747	8800900.372	31.109
I2.1	663504.122	8800923.928	31.832
I2.2	663567.867	8800917.256	31.371
I2.3	663579.120	8800919.224	31.191
I2.4	663585.724	8800928.546	31.007
I2.5	663595.417	8800928.766	30.994
I2.6	663594.566	8800925.052	31.012
I2.7	663596.189	8800914.214	31.027

INTERSECTION SETTING OUT COORDINATES WGS84 / UTM 37S			
POINT	E	N	ELEVATION
I2.8	663604.749	8800907.372	31.025
I2.9	663673.320	8800886.137	30.222
I2.10	663670.539	8800877.158	30.222
I2.11	663643.572	8800883.677	30.511
I2.12	663616.605	8800890.196	30.771
I2.14	663558.745	8800905.944	31.340
I2.15	663531.668	8800911.519	31.601

ROAD A2 - A1
CONTRACT 1 - INTERSECTION 2
SCALE 1:500

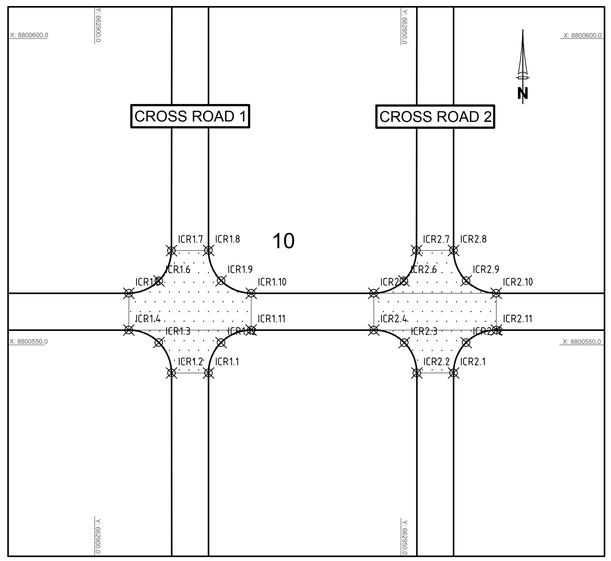

INTERSECTION SETTING OUT COORDINATES WGS84 / UTM 37S			
POINT	E	N	ELEVATION
ICR1.1	662918.587	8800545.425	33.831
ICR1.2	662912.546	8800545.425	33.643
ICR1.3	662910.482	8800550.388	33.646
ICR1.4	662905.577	8800552.425	33.761
ICR1.5	662905.576	8800558.425	33.581
ICR1.6	662910.477	8800560.465	33.467
ICR1.7	662912.538	8800565.395	33.422
ICR1.8	662918.587	8800565.425	33.611
ICR1.9	662920.637	8800560.475	33.791
ICR1.10	662925.562	8800558.425	33.502
ICR1.11	662925.540	8800552.425	33.682
ICR1.12	662920.637	8800550.375	33.971

CROSS ROAD 1
CONTRACT 1
SCALE 1:500

INTERSECTION SETTING OUT COORDINATES WGS84 / UTM 37S			
POINT	E	N	ELEVATION
ICR2.1	662958.587	8800545.425	33.671
ICR2.2	662952.587	8800545.425	33.491
ICR2.3	662950.537	8800550.375	33.479
ICR2.4	662945.557	8800552.425	33.601
ICR2.5	662945.547	8800558.425	33.421
ICR2.6	662950.469	8800560.469	33.308
ICR2.7	662952.526	8800565.407	33.259
ICR2.8	662958.587	8800565.425	33.451
ICR2.9	662960.637	8800560.475	33.631
ICR2.10	662965.547	8800558.425	33.342
ICR2.11	662965.573	8800552.425	33.522
ICR2.12	662960.637	8800550.375	33.811

CROSS ROAD 2
CONTRACT 1
SCALE 1:500

SCALE FOR REDUCED PLAN
0 10 20 30 40 50
50mm ON ORIGINAL DRAWING

NOTES

REFRENCE DWG's No:
1. EA-MZ-CI000-WOR-E05-00015-01
2. EA-MZ-CI000-WOR-E05-00015-02
3. EA-MZ-CI000-WOR-E05-00015-24

ISSUED FOR CONSTRUCTION

WorleyParsons RSA retains the copyright in all intellectual property, including designs and/or documents prepared in terms of this appointment for the project covered by the appointment. The client may use the designs and/or documents for the sole purpose of their intended use on this project only subject to payment for the design having been received. Use for any other purpose, whether or not the design and/or documents have been paid for constitutes an infringement of copyright, and all rights are reserved.

All dimensions must be verified on site before the works commence. Refer any discrepancies to the Engineer.

Copyright reserved

REVISIONS

NO.	DATE	CHECKED	DONE BY	DESCRIPTION
A	04/08/15	D. d T.	A.U.	ISSUED FOR INTERNAL REVIEW
B	09/09/15	D. d T.	A.U.	ISSUED FOR DETAIL DESIGN
C	28/09/15	D. d T.	A.U.	ISSUED FOR SQUAD CHECK
D	13/10/15	D. d T.	A.U.	ISSUED FOR CLIENT REVIEW
E	30/10/15	D. d T.	A.U.	ISSUED FOR CLIENT APPROVAL
0	01/12/15	D. d T.	A.U.	ISSUED FOR CONSTRUCTION

WorleyParsons
resources & energy
39 MELROSE BOULEVARD, MELROSE ARCH, JOHANNESBURG
P.O. Box 61232, MARSHALLTOWN, 2107
TEL: +27 (0)11 218 3000
FAX: +27(0)11 218 3100
www.worleyparsons.com
WorleyParsons RSA (Pty) Ltd.

	NAME	SIGNATURE	DATE
DRAWN BY:	A.UJMA		01/12/2015
CHECKED:	D. du TOIT		01/12/2015
DESIGNER:	R. van SCHALKWYK		01/12/2015
PR ENG:	D. du TOIT Pr. No. 201170110		01/12/2015
PROJECT ENG MANAGER:	L. PADAYACHEE Pr. No.		01/12/2015
LOCAL PR ENG:			
CLIENT:			

CLIENT

MOZAMBIQUE GAS DEVELOPMENT PROJECT

Anadarko
Moçambique Área 1, Lda

PROJECT
AMA 1
RESETTLEMENT
VILLAGE

DRAWING DESCRIPTION

INTERSECTION 1 - 2 AND
CROSS ROAD 1 & 2
SETTING OUT PLAN

SCALE	DATE
AS SHOWN ORIGINAL DWG SIZE A1	DECEMBER 2015

DRAWING NUMBER: C00290-00-CI-DLP-0012-008
REV NO: 0

ANADARKO DRAWING NUMBER
EA-MZ-CI0000-WOR-E05-00018-08

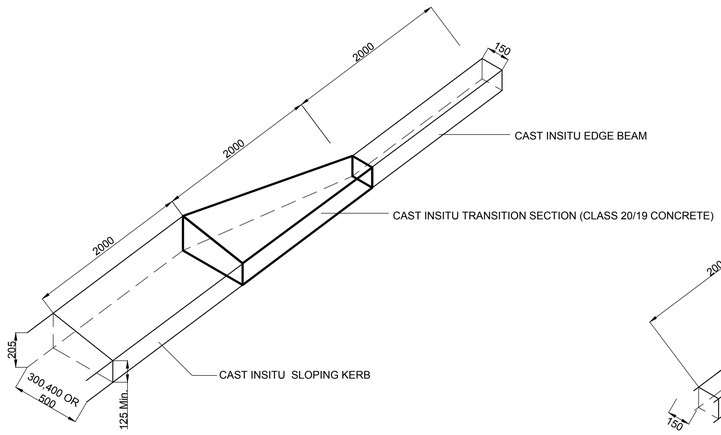

TRANSITION FROM SLOPING KERB TO EDGE BEAM

N.T.S

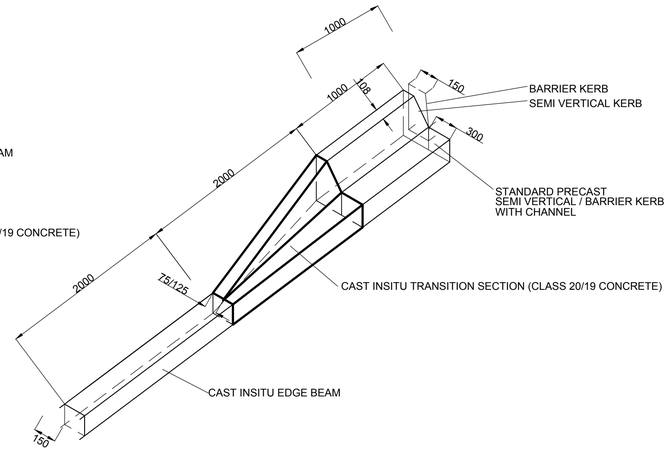

TRANSITION FROM SEMI VERTICAL / BARRIER KERB TO EDGE BEAM

N.T.S

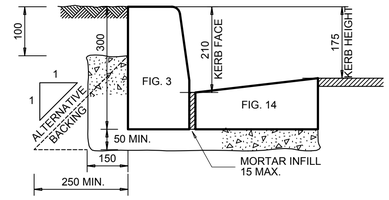

FIG. 3 AND FIG.14 CHANNEL (CAST IN-SITU)

N.T.S

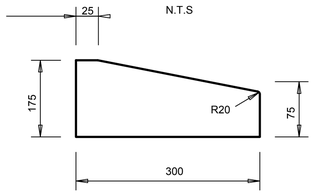

FIG. 8 B MOUNTABLE KERB (CAST IN-SITU)

N.T.S

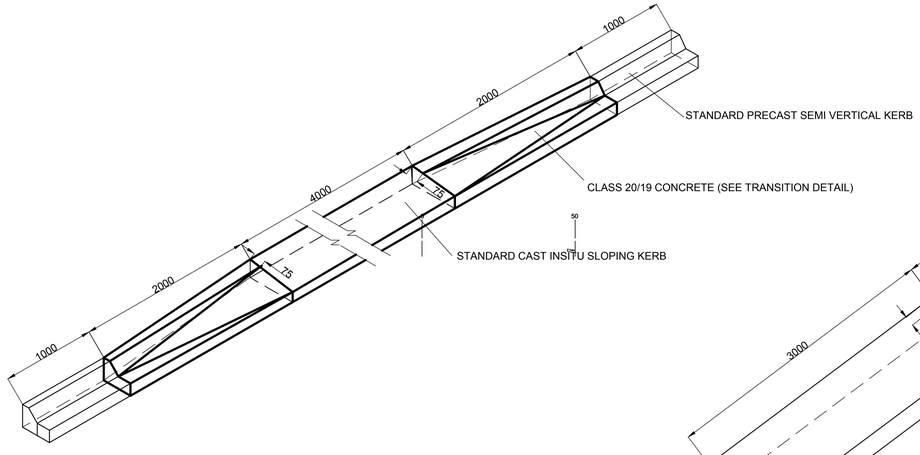

DETAIL OF VEHICLE ENTRANCE IN SEMI VERTICAL KERBING

N.T.S

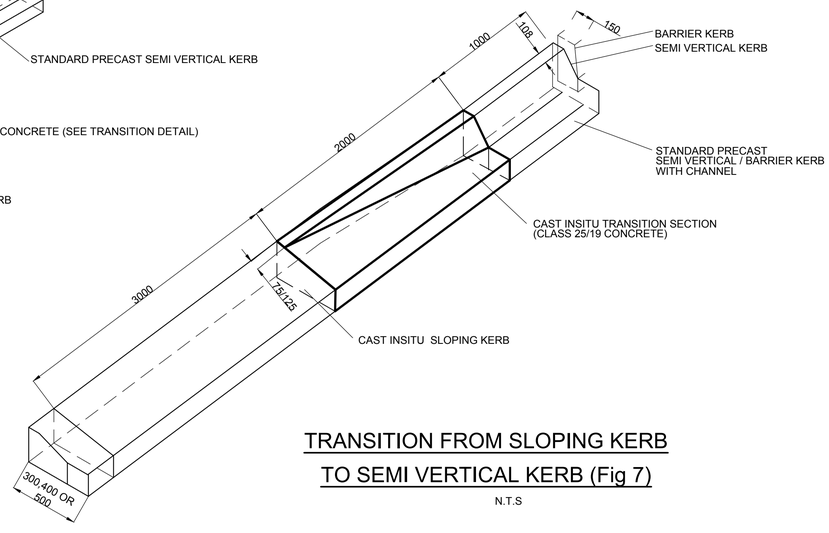

TRANSITION FROM SLOPING KERB TO SEMI VERTICAL KERB (Fig 7)

N.T.S

NOTES:

1. CAST IN-SITU CONCRETE
   - 1.1 Concrete to be class 20/19.
   - 1.2 Concrete to be cured for a minimum period of 7 days.
   - 1.3 All concrete to be used for sloping kerbs or edge beams shall have a slump not greater than 60mm.
   - 1.4 Where there is a difference between the top of the subbase and the bottom of the cast in-situ kerbs of less than 75mm, such difference shall be made up with the same concrete as specified for the kerb, otherwise compacted subbase material shall be used.
   - 1.5 The use of a machine to place cast in-situ kerbs must first be approved by the Engineer.

SCALE FOR REDUCED PLAN
0 10 20 30 40 50
50mm ON ORIGINAL DRAWING

NOTES

ISSUED FOR CONSTRUCTION

WorleyParsons RSA retains the copyright in all intellectual property, including designs and/or documents prepared in terms of this appointment for the project covered by the appointment. The client may use the designs and/or documents for the sole purpose of their intended use on this project only subject to payment for the design having been received. Use for any other purpose, whether or not the design and/or documents have been paid for constitutes an infringement of copyright, and all rights are reserved.

All dimensions must be verified on site before the works commence. Refer any discrepancies to the Engineer.

Copyright reserved

REVISIONS

NO.	DATE	CHECKED	DONE BY	DESCRIPTION
A	04/08/15	D. d T.	A.U.	ISSUED FOR INTERNAL REVIEW
B	09/09/15	D. d T.	A.U.	ISSUED FOR DETAIL DESIGN
C	28/09/15	D. d T.	A.U.	ISSUED FOR SQUAD CHECK
D	13/10/15	D. d T.	A.U.	ISSUED FOR CLIENT REVIEW
E	30/10/15	D. d T.	A.U.	ISSUED FOR CLIENT APPROVAL
0	01/12/15	D. d T.	A.U.	ISSUED FOR CONSTRUCTION

WorleyParsons
resources & energy

39 MELROSE BOULEVARD, MELROSE ARCH, JOHANNESBURG
P.O. Box 61232, MARSHALLTOWN, 2107
TEL: +27 (0)11 218 3000
FAX: +27(0)11 218 3100
www.worleyparsons.com
WorleyParsons RSA (Pty) Ltd.

	NAME	SIGNATURE	DATE
DRAWN BY:	A.UJMA		01/12/2015
CHECKED:	D. du TOIT		01/12/2015
DESIGNER:	R. van SCHALKWYK		01/12/2015
PR ENG:	D. du TOIT Pr. No. 201170110		01/12/2015
PROJECT ENG MANAGER:	L. PADAYACHEE Pr. No.		01/12/2015
LOCAL PR ENG:			
CLIENT:			

CLIENT

MOZAMBIQUE GAS DEVELOPMENT PROJECT

Anadarko Moçambique Área 1, Lda

PROJECT
AMA 1 RESETTLEMENT VILLAGE

DRAWING DESCRIPTION

TYPICAL KERB AND TRANSITION KERB DETAILS

SCALE	DATE
AS SHOWN (ORIGINAL DWG SIZE A1)	DECEMBER 2015

DRAWING NUMBER	REV NO
C00290-00-CI-DLP-0011-006	0

ANADARKO DRAWING NUMBER

EA-MZ-CI0000-WOR-E05-00016-06

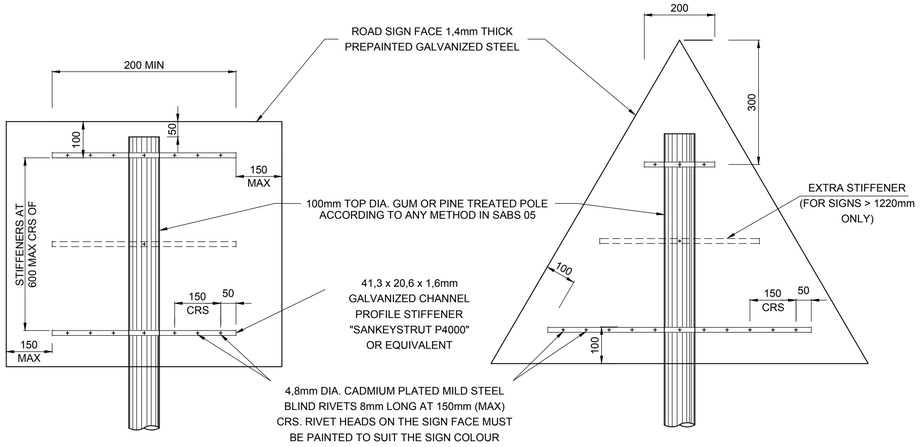

REAR ELEVATION

REAR ELEVATION

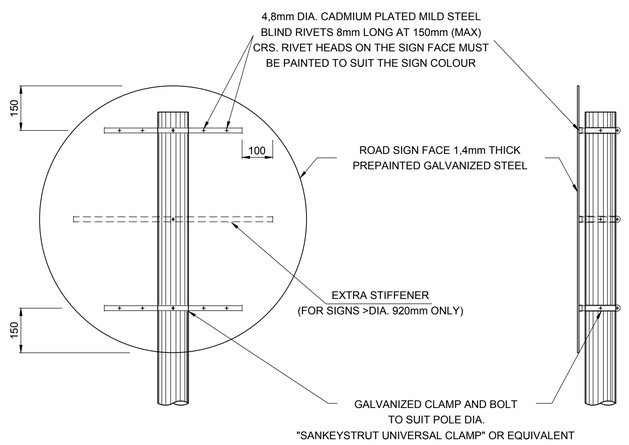

REAR ELEVATION

TYPICAL SIDE ELEVATION

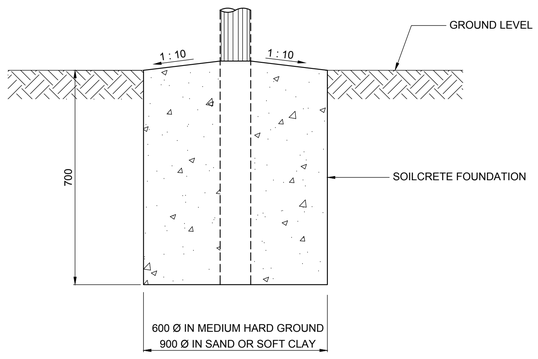

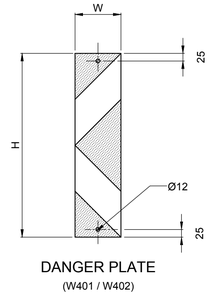

DANGER PLATE
(W401 / W402)

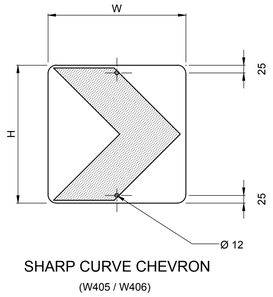

SHARP CURVE CHEVRON
(W405 / W406)

MOUNTING HOLES FOR HAZARD MARKER SIGNS WITHOUT FRAMEWORK

SCALE 1 : 10

NOTES :

THE ROAD SIGN FACES SHALL BE MANUFACTURED AND ERECTED IN ACCORDANCE WITH THE FOLLOWING REQUIREMENTS :

1. DETAILS ON THIS DRAWING ARE APPLICABLE TO ROAD SIGNS SMALLER THAN 1,5m² REQUIRING DOUBLE / SINGLE SUPPORTS.
2. BOLTS, WASHERS AND NUTS SHALL COMPLY WITH THE REQUIREMENTS OF SANS 1700-5-1 AND SHALL BE GALVANISED IN ACCORDANCE WITH THE REQUIREMENTS OF SANS 121 : 2000 (ISO 1461 : 1999).
3. BLIND RIVETS SHALL BE 4.8mm DIA CADMIUM PLATED MILD STEEL.

MINIMUM REGULATORY SIGN SIZES			
	OPERATING SPEED (km/h)		
	70 - 90	60	40
CIRCULAR SIGN DIAMETER (mm)	900	600	600
RECTANGULAR SIGN W x H (mm)	900 x 675	600 x 450	600 x 450
TRIANGULAR SIGN SIDE LENGTH (mm)	1200	900	900

HAZARD MARKER SIGNS		
	DANGER PLATE SIGN W401-RIGHT W402-LEFT	SHARP CURVE CHEVRON W405-RIGHT W406-LEFT
OPERATING SPEED (km/h)	SIZE H x W (mm)	SIZE H x W (mm)
80	600 x 150	450 x 450
60	600 x 150	450 x 450
40	600 x 150	450 x 450

SCALE FOR REDUCED PLAN
0 10 20 30 40 50
50mm ON ORIGINAL DRAWING

NOTES

ISSUED FOR CONSTRUCTION

WorleyParsons RSA retains the copyright in all intellectual property, including designs and/or documents prepared in terms of this appointment for the project covered by the appointment. The client may use the designs and/or documents for the sole purpose of their intended use on this project only subject to payment for the design having been received. Use for any other purpose, whether or not the design and/or documents have been paid for constitutes an infringement of copyright, and all rights are reserved.

All dimensions must be verified on site before the works commence. Refer any discrepancies to the Engineer.

Copyright reserved

REVISIONS

NO.	DATE	CHECKED	DONE BY	DESCRIPTION
A	04/08/15	D. d T.	A.U.	ISSUED FOR INTERNAL REVIEW
B	09/09/15	D. d T.	A.U.	ISSUED FOR DETAIL DESIGN
C	28/09/15	D. d T.	A.U.	ISSUED FOR SQUAD CHECK
D	13/10/15	D. d T.	A.U.	ISSUED FOR CLIENT REVIEW
E	30/10/15	D. d T.	A.U.	ISSUED FOR CLIENT APPROVAL
0	01/12/15	D. d T.	A.U.	ISSUED FOR CONSTRUCTION

WorleyParsons
resources & energy
39 MELROSE BOULEVARD, MELROSE ARCH, JOHANNESBURG
P.O. Box 61232, MARSHALLTOWN, 2107
TEL: +27 (0)11 218 3000
FAX: +27(0)11 218 3100
www.worleyparsons.com
WorleyParsons RSA (Pty) Ltd.

	NAME	SIGNATURE	DATE
DRAWN BY:	A.UJMA		01/12/2015
CHECKED:	D. du TOIT		01/12/2015
DESIGNER:	R. van SCHALKWYK		01/12/2015
PR ENG:	D. du TOIT Pr. No. 201170110		01/12/2015
PROJECT ENG MANAGER:	L. PADAYACHEE Pr. No.		01/12/2015
LOCAL PR ENG:			
CLIENT:			

CLIENT

MOZAMBIQUE GAS DEVELOPMENT PROJECT

Anadarko Moçambique Área 1, Lda

PROJECT
AMA 1
RESETTLEMENT
VILLAGE

DRAWING DESCRIPTION

TYPICAL FIXING DETAILS
FOR ROAD SIGNS

SCALE
AS SHOWN
ORIGINAL DWG SIZE A1

DATE
DECEMBER 2015

DRAWING NUMBER
C00290-00-CI-DLP-0011-001

REV NO
0

ANADARKO DRAWING NUMBER
EA-MZ-CI0000-WOR-E05-00016-01

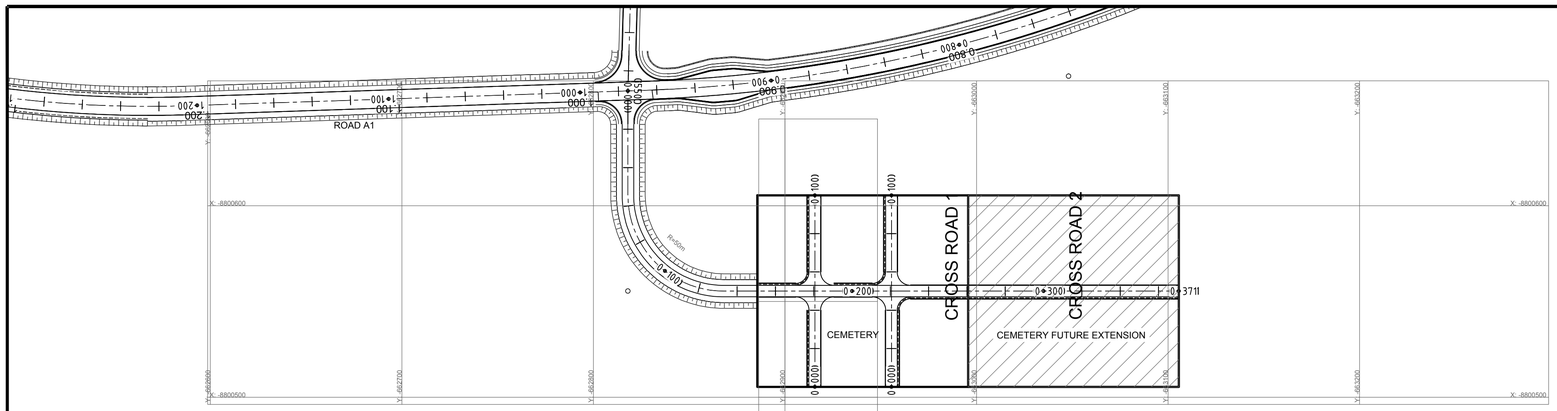

CEMETERY ACCESS ROAD

SCALE 1:1000

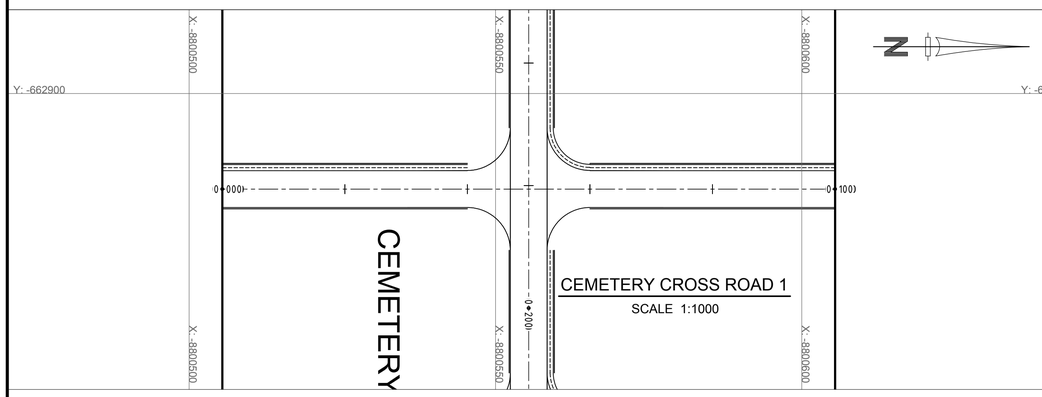

CEMETERY CROSS ROAD 1

SCALE 1:1000

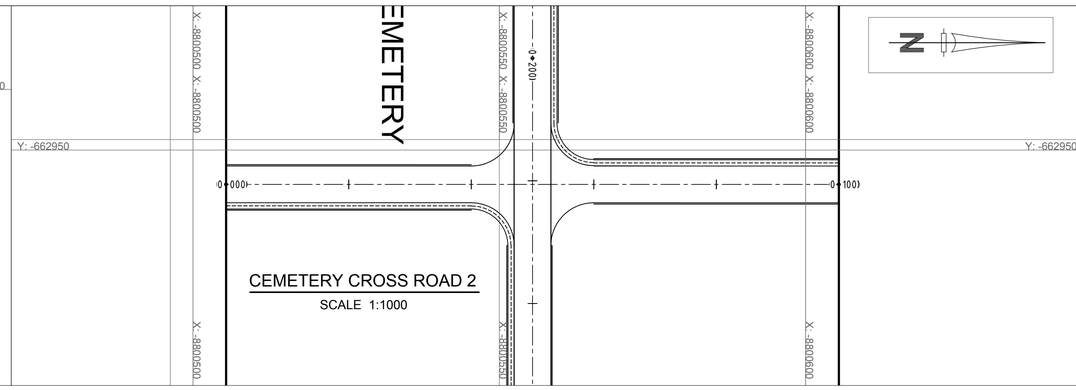

CEMETERY CROSS ROAD 2

SCALE 1:1000

LONGSECTION CEMETERY MAIN ROAD FROM 0.000 TO 370.580

LONGSECTION

HOR SCALE 1:2000
VER SCALE 1:200

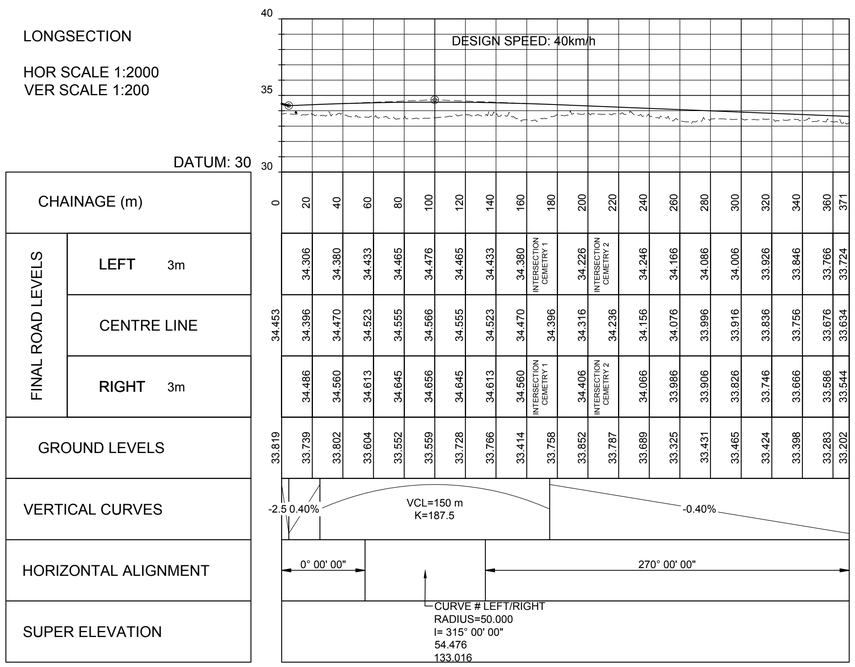

CHAINAGE (m)	0	20	40	60	80	100	120	140	160	180	200	220	240	260	280	300	320	340	360	371
FINAL ROAD LEVELS LEFT 3m	34.453	34.306	34.380	34.433	34.465	34.476	34.465	34.433	34.380	34.396	34.226	34.236	34.156	34.076	33.996	33.916	33.836	33.756	33.676	33.634
FINAL ROAD LEVELS CENTRE LINE	34.453	34.396	34.470	34.523	34.555	34.566	34.555	34.523	34.470	34.396	34.316	34.236	34.156	34.076	33.996	33.916	33.836	33.756	33.676	33.634
FINAL ROAD LEVELS RIGHT 3m	33.819	34.486	34.560	34.613	34.645	34.656	34.645	34.613	34.560	33.758	34.406	34.066	33.986	33.906	33.826	33.746	33.666	33.586	33.544	
GROUND LEVELS	33.819	33.739	33.802	33.604	33.552	33.559	33.728	33.766	33.414	33.758	33.852	33.787	33.689	33.325	33.431	33.465	33.424	33.398	33.283	33.202

LONGSECTION CEMETERY CROSS ROAD FROM 0.000 TO 100.000

LONGSECTION

HOR SCALE 1:2000
VER SCALE 1:200

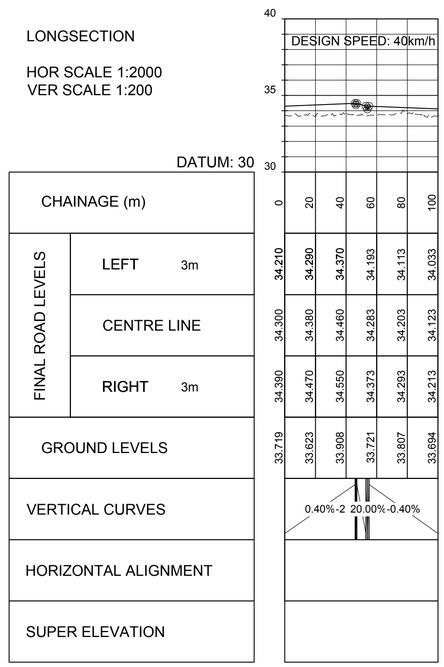

CHAINAGE (m)	0	20	40	60	80	100
FINAL ROAD LEVELS LEFT 3m	34.210	34.290	34.370	34.193	34.113	34.033
FINAL ROAD LEVELS CENTRE LINE	34.300	34.380	34.460	34.283	34.203	34.123
FINAL ROAD LEVELS RIGHT 3m	34.390	34.470	34.550	34.373	34.293	34.213
GROUND LEVELS	33.719	33.623	33.908	33.721	33.807	33.694

LONGSECTION CEMETERY CROSS ROAD 2 FROM 0.000 TO 100.000

LONGSECTION

HOR SCALE 1:2000
VER SCALE 1:200

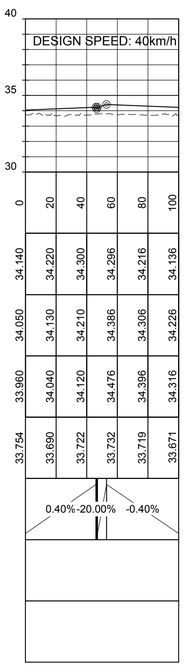

CHAINAGE (m)	0	20	40	60	80	100
FINAL ROAD LEVELS LEFT 3m	34.140	34.220	34.300	34.296	34.216	34.136
FINAL ROAD LEVELS CENTRE LINE	34.050	34.130	34.210	34.386	34.306	34.226
FINAL ROAD LEVELS RIGHT 3m	33.960	34.040	34.120	34.476	34.396	34.316
GROUND LEVELS	33.754	33.690	33.722	33.732	33.719	33.671

SCALE FOR REDUCED PLAN
0 10 20 30 40 50
50mm ON ORIGINAL DRAWING

NOTES

LEGEND

POLYCEM SIDE DRAIN

REFRENCE DWG's No:

1. EA-MZ-CI0000-WOR-E05-00018-08
2. EA-MZ-CI0000-WOR-E05-00014-02
3. EA-MZ-CI0000-WOR-E05-00015-22

ISSUED FOR CONSTRUCTION

WorleyParsons RSA retains the copyright in all intellectual property, including designs and/or documents prepared in terms of this appointment for the project covered by the appointment. The client may use the designs and/or documents for the sole purpose of their intended use on this project only subject to payment for the design having been received. Use for any other purpose, whether or not the design and/or documents have been paid for constitutes an infringement of copyright, and all rights are reserved.

All dimensions must be verified on site before the works commence. Refer any discrepancies to the Engineer.

Copyright reserved

REVISIONS

NO.	DATE	CHECKED	DONE BY	DESCRIPTION
A	04/08/15	D. d T.	A.U.	ISSUED FOR INTERNAL REVIEW
B	09/09/15	D. d T.	A.U.	ISSUED FOR DETAIL DESIGN
C	28/09/15	D. d T.	A.U.	ISSUED FOR SQUAD CHECK
D	13/10/15	D. d T.	A.U.	ISSUED FOR CLIENT REVIEW
E	30/10/15	D. d T.	A.U.	ISSUED FOR CLIENT APPROVAL
0	01/12/15	D. d T.	A.U.	ISSUED FOR CONSTRUCTION

WorleyParsons
resources & energy
39 MELROSE BOULEVARD, MELROSE ARCH, JOHANNESBURG
P.O. Box 61232, MARSHALLTOWN, 2107
TEL: +27 (0)11 218 3000
FAX: +27(0)11 218 3100
www.worleyparsons.com
WorleyParsons RSA (Pty) Ltd.

	NAME	SIGNATURE	DATE
DRAWN BY:	A.UJMA		01/12/2015
CHECKED:	D. du TOIT		01/12/2015
DESIGNER:	R. van SCHALKWYK		01/12/2015
PR ENG:	D. du TOIT Pr. No. 201170110		01/12/2015
PROJECT ENG MANAGER:	L. PADAYACHEE Pr. No.		01/12/2015
LOCAL PR ENG:			
CLIENT:			

CLIENT

MOZAMBIQUE GAS DEVELOPMENT PROJECT

Anadarko
Moçambique Área 1, Lda

PROJECT
AMA 1
RESETTLEMENT
VILLAGE

DRAWING DESCRIPTION

LAYOUT PLAN AND
LONGITUDINAL SECTION:

CEMETERY ACCESS ROAD
AND CEMETERY CROSS ROADS

SCALE	DATE
AS SHOWN (ORIGINAL DWG SIZE A1)	DECEMBER 2015

DRAWING NUMBER	REV NO
C00290-00-CI-DAL-0001-024	0

ANADARKO DRAWING NUMBER

EA-MZ-CI0000-WOR-E05-00015-24

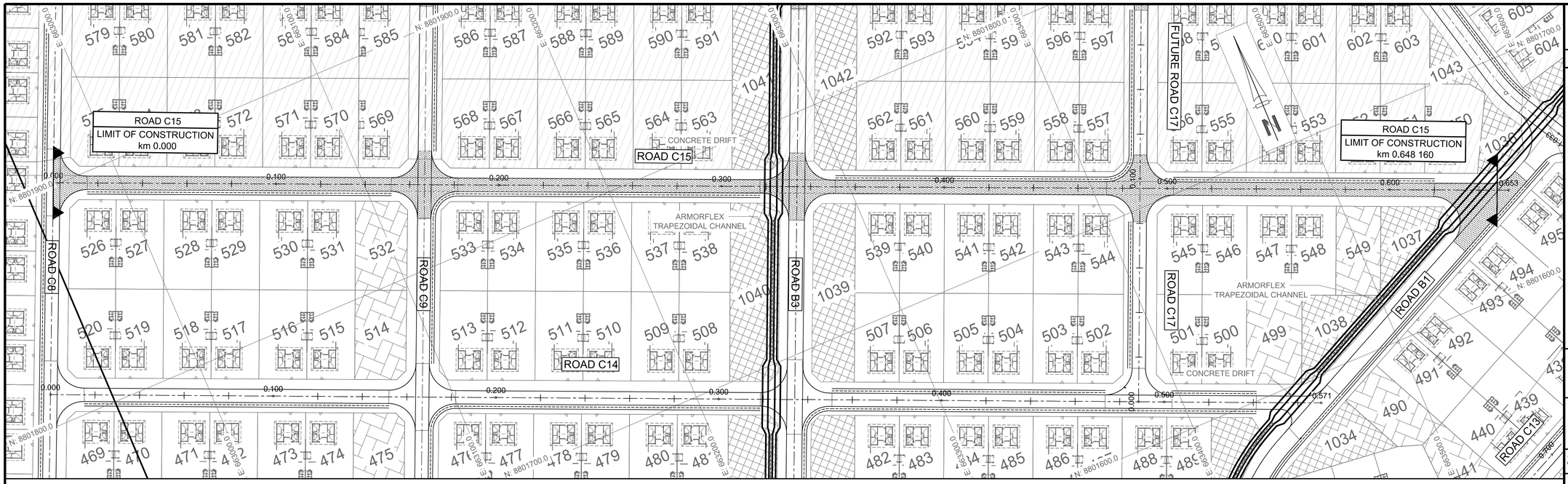

ROAD C15: km 0.000- END

SCALE 1:1000

ROAD C15

LONGSECTION

HOR SCALE 1:2000
VER SCALE 1:200

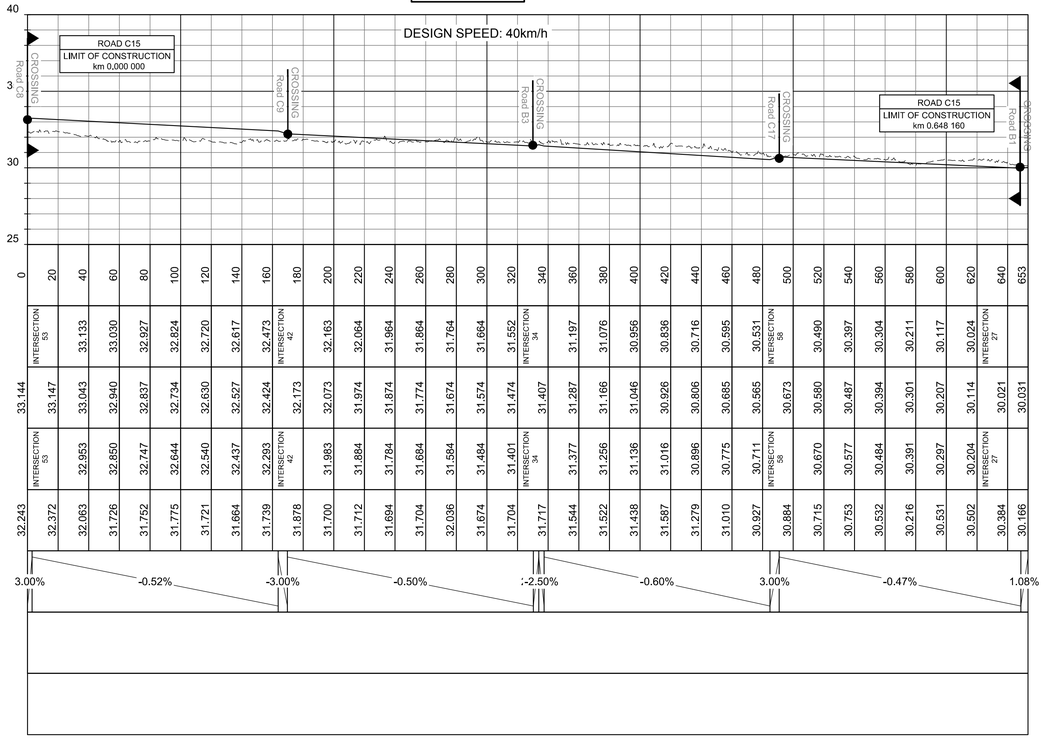

DATUM: 25

CHAINAGE (m)		0	20	40	60	80	100	120	140	160	180	200	220	240	260	280	300	320	340	360	380	400	420	440	460	480	500	520	540	560	580	600	620	640	653
FINAL ROAD LEVELS	LEFT 3.0		INTERSECTION 53	33.133	33.030	32.927	32.824	32.720	32.617	32.473	INTERSECTION 42	32.163	32.064	31.964	31.864	31.764	31.664	31.552	INTERSECTION 34	31.197	31.076	30.956	30.836	30.716	30.595	30.531	INTERSECTION 58	30.490	30.397	30.304	30.211	30.117	30.024	INTERSECTION 27	
	CENTRE LINE	33.144	33.147	33.043	32.940	32.837	32.734	32.630	32.527	32.424	32.173	32.073	31.974	31.874	31.774	31.674	31.574	31.474	31.407	31.287	31.166	31.046	30.926	30.806	30.685	30.565	30.673	30.580	30.487	30.394	30.301	30.207	30.114	30.021	30.031
	RIGHT 3.0		INTERSECTION 53	32.953	32.850	32.747	32.644	32.540	32.437	32.283	INTERSECTION 42	31.983	31.884	31.784	31.684	31.584	31.484	31.401	INTERSECTION 34	31.377	31.256	31.136	31.016	30.896	30.775	30.711	INTERSECTION 58	30.670	30.577	30.484	30.391	30.297	30.204	INTERSECTION 27	
GROUND LEVELS		32.243	32.372	32.063	31.726	31.752	31.775	31.721	31.664	31.739	31.878	31.700	31.712	31.694	31.704	32.036	31.674	31.704	31.717	31.544	31.522	31.438	31.587	31.279	31.010	30.927	30.884	30.715	30.753	30.532	30.216	30.531	30.502	30.384	30.166
VERTICAL CURVES			3.00%		-0.52%		-3.00%		-0.50%			:-2.50%		-0.60%			3.00%			-0.47%			1.08%												
HORIZONTAL ALIGNMENT																																			
SUPER ELEVATION																																			

SCALE FOR REDUCED PLAN
0 10 20 30 40 50
50mm ON ORIGINAL DRAWING

NOTES

LEGEND

POLYCEM SIDE DRAIN

FUTURE DEVELOPMENT

REFRENCE DWG's No:

1. EA-MZ-CI000-WOR-E05-00015-22
2. EA-MZ-CI000-WOR-E05-00018-13
3. EA-MZ-CI000-WOR-E05-00018-14
4. EA-MZ-CI000-WOR-E05-00018-15
5. EA-MZ-CI000-WOR-E05-00018-17
6. EA-MZ-CI000-WOR-E05-00018-18

ISSUED FOR CONSTRUCTION

WorleyParsons RSA retains the copyright in all intellectual property, including designs and/or documents prepared in terms of this appointment for the project covered by the appointment. The client may use the designs and/or documents for the sole purpose of their intended use on this project only subject to payment for the design having been received. Use for any other purpose, whether or not the design and/or documents have been paid for constitutes an infringement of copyright, and all rights are reserved.

All dimensions must be verified on site before the works commence. Refer any discrepancies to the Engineer.

Copyright reserved

REVISIONS

NO.	DATE	CHECKED	DONE BY	DESCRIPTION
A	04/08/15	D. d T.	A.U.	ISSUED FOR INTERNAL REVIEW
B	09/09/15	D. d T.	A.U.	ISSUED FOR DETAIL DESIGN
C	28/09/15	D. d T.	A.U.	ISSUED FOR SQUAD CHECK
D	13/10/15	D. d T.	A.U.	ISSUED FOR CLIENT REVIEW
E	30/10/15	D. d T.	A.U.	ISSUED FOR CLIENT APPROVAL
0	01/12/15	D. d T.	A.U.	ISSUED FOR CONSTRUCTION

WorleyParsons
resources & energy
39 MELROSE BOULEVARD, MELROSE ARCH, JOHANNESBURG
P.O. Box 61232, MARSHALLTOWN, 2107
TEL: +27 (0)11 218 3000
FAX: +27(0)11 218 3100
www.worleyparsons.com
WorleyParsons RSA (Pty) Ltd.

	NAME	SIGNATURE	DATE
DRAWN BY:	A.UJMA		01/12/2015
CHECKED:	D. du TOIT		01/12/2015
DESIGNER:	R. van SCHALKWYK		01/12/2015
PR ENG:	D. du TOIT Pr. No. 201170110		01/12/2015
PROJECT ENG MANAGER:	L. PADAYACHEE Pr. No.		01/12/2015
LOCAL PR ENG:			
CLIENT:			

CLIENT

MOZAMBIQUE GAS DEVELOPMENT PROJECT

Anadarko
Moçambique Área 1, Lda

PROJECT
AMA 1
RESETTLEMENT
VILLAGE

DRAWING DESCRIPTION

LAYOUT PLAN AND
LONGITUDINAL SECTION:

ROAD C15

SCALE	DATE
AS SHOWN (ORIGINAL DWG SIZE A1)	DECEMBER 2015

DRAWING NUMBER	REV NO
C00290-00-CI-DAL-0001-020	0

ANADARKO DRAWING NUMBER

EA-MZ-CI0000-WOR-E05-00015-20

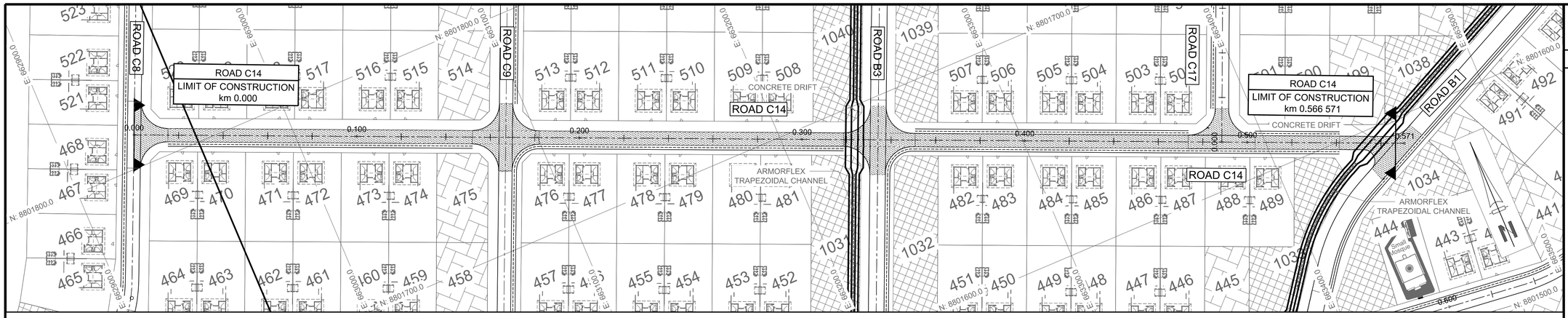

ROAD C14: km 0.000- END

SCALE 1:1000

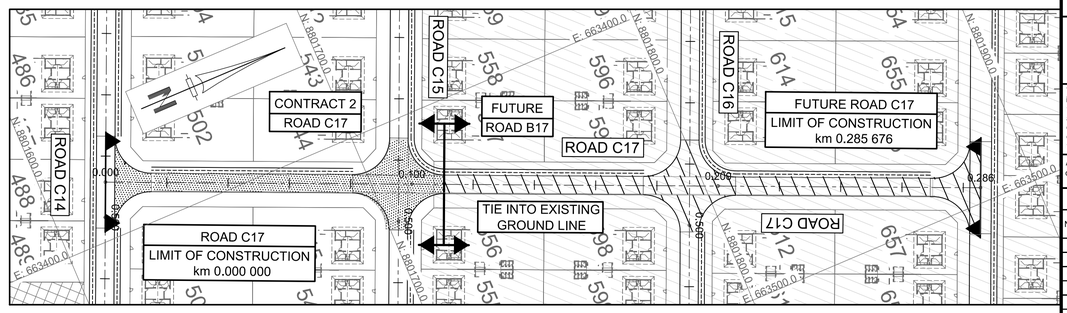

ROAD C17: km 0.000- START FUTURE

SCALE 1:1000

ROAD C14

LONGSECTION

HOR SCALE 1:2000
VER SCALE 1:200

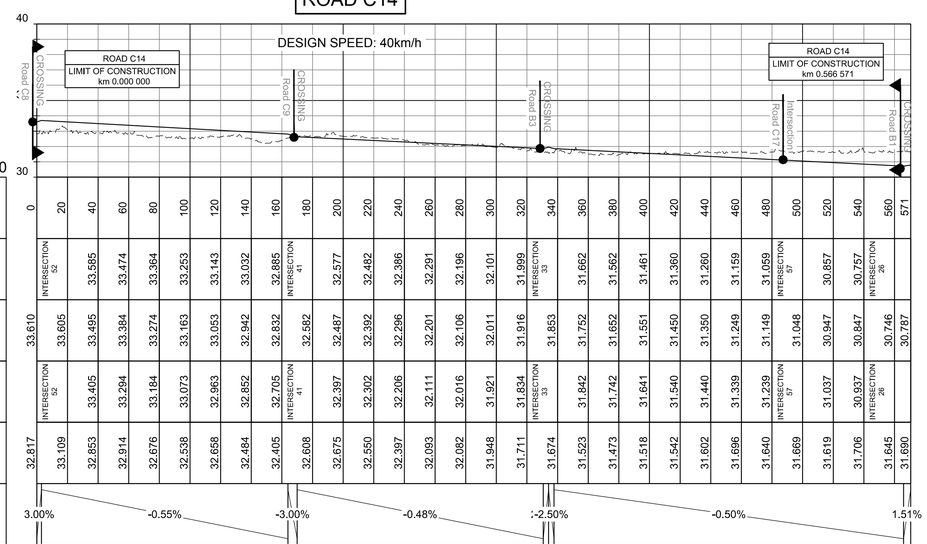

CHAINAGE (m)		0	20	40	60	80	100	120	140	160	180	200	220	240	260	280	300	320	340	360	380	400	420	440	460	480	500	520	540	560	571
FINAL ROAD LEVELS	LEFT 3.0		INTERSECTION 52	33.605	33.585	33.474	33.364	33.253	33.143	33.032	32.885	INTERSECTION 41	32.577	32.482	32.386	32.291	32.196	32.101	31.999	INTERSECTION 33	31.662	31.562	31.461	31.360	31.260	31.159	31.059	INTERSECTION 27	30.857	30.757	INTERSECTION 26	
	CENTRE LINE	33.610	33.605	33.495	33.384	33.274	33.163	33.053	32.942	32.832	32.582	32.487	32.392	32.296	32.201	32.106	32.011	31.916	31.853	31.752	31.652	31.551	31.450	31.350	31.249	31.149	31.048	30.947	30.847	30.746	30.787
	RIGHT 3.0		INTERSECTION 52	33.405	33.294	33.184	33.073	32.963	32.852	32.705	INTERSECTION 41	32.397	32.302	32.206	32.111	32.016	31.921	31.834	INTERSECTION 33	31.842	31.742	31.641	31.540	31.440	31.339	31.239	INTERSECTION 27	31.037	30.937	INTERSECTION 26	
GROUND LEVELS		32.817	33.109	32.853	32.914	32.676	32.538	32.658	32.484	32.405	32.608	32.675	32.550	32.397	32.093	32.082	31.948	31.711	31.674	31.523	31.473	31.518	31.542	31.602	31.696	31.640	31.669	31.619	31.706	31.645	31.690
VERTICAL CURVES			3.00%		-0.55%			-3.00%				-0.48%							-2.50%					-0.50%							1.51%
HORIZONTAL ALIGNMENT																															
SUPER ELEVATION																															

ROAD C17

LONGSECTION

HOR SCALE 1:2000
VER SCALE 1:200

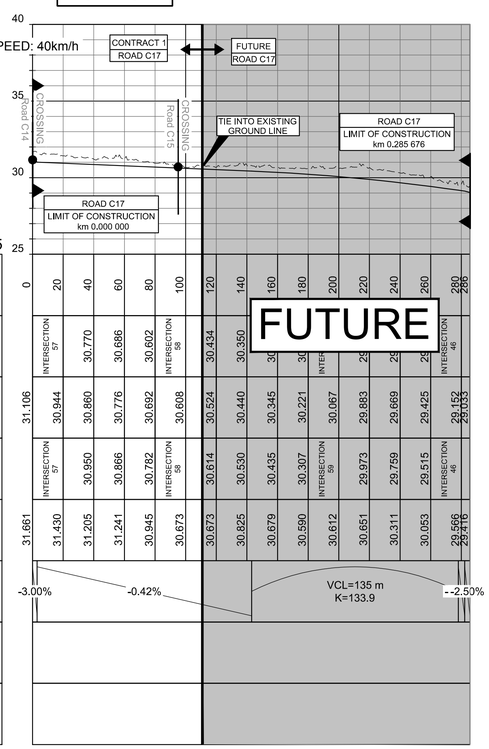

CHAINAGE (m)		0	20	40	60	80	100	120	140	160	180	200	220	240	260	280	286
FINAL ROAD LEVELS	LEFT 3.0		INTERSECTION 57	30.770	30.686	30.602	INTERSECTION 58	30.434	30.350							INTERSECTION 46	
	CENTRE LINE	31.106	30.944	30.860	30.776	30.692	30.608	30.524	30.440	30.345	30.221	30.067	29.883	29.669	29.425	29.152	29.033
	RIGHT 3.0		INTERSECTION 57	30.950	30.866	30.782	INTERSECTION 58	30.614	30.530	30.435	30.307	INTERSECTION 59	29.973	29.759	29.515	INTERSECTION 46	
GROUND LEVELS		31.661	31.430	31.205	31.241	30.945	30.673	30.673	30.825	30.679	30.590	30.612	30.651	30.311	30.053	29.566	29.416
VERTICAL CURVES			-3.00%		-0.42%											-2.50%	
HORIZONTAL ALIGNMENT																	
SUPER ELEVATION																	

SCALE FOR REDUCED PLAN
0 10 20 30 40 50
50mm ON ORIGINAL DRAWING

NOTES

LEGEND

- POLYCEM SIDE DRAIN
- FUTURE EXPANSION

REFRENCE DWG's No:

1. EA-MZ-CI000-WOR-E05-00015-22
2. EA-MZ-CI000-WOR-E05-00018-13
3. EA-MZ-CI000-WOR-E05-00018-14
4. EA-MZ-CI000-WOR-E05-00018-15
5. EA-MZ-CI000-WOR-E05-00018-17
6. EA-MZ-CI000-WOR-E05-00018-18

ISSUED FOR CONSTRUCTION

WorleyParsons RSA retains the copyright in all intellectual property, including designs and/or documents prepared in terms of this appointment for the project covered by the appointment. The client may use the designs and/or documents for the sole purpose of their intended use on this project only subject to payment for the design having been received. Use for any other purpose, whether or not the design and/or documents have been paid for constitutes an infringement of copyright, and all rights are reserved.

All dimensions must be verified on site before the works commence. Refer any discrepancies to the Engineer.

Copyright reserved

REVISIONS

NO.	DATE	CHECKED	DONE BY	DESCRIPTION
A	04/08/15	D. d T.	A.U.	ISSUED FOR INTERNAL REVIEW
B	09/09/15	D. d T.	A.U.	ISSUED FOR DETAIL DESIGN
C	28/09/15	D. d T.	A.U.	ISSUED FOR SQUAD CHECK
D	13/10/15	D. d T.	A.U.	ISSUED FOR CLIENT REVIEW
E	30/10/15	D. d T.	A.U.	ISSUED FOR CLIENT APPROVAL
0	01/12/15	D. d T.	A.U.	ISSUED FOR CONSTRUCTION

WorleyParsons
resources & energy
39 MELROSE BOULEVARD, MELROSE ARCH, JOHANNESBURG
P.O. Box 61232, MARSHALLTOWN, 2107
TEL: +27 (0)11 218 3000
FAX: +27(0)11 218 3100
www.worleyparsons.com
WorleyParsons RSA (Pty) Ltd.

	NAME	SIGNATURE	DATE
DRAWN BY:	A.UJMA		01/12/2015
CHECKED:	D. du TOIT		01/12/2015
DESIGNER:	R. van SCHALKWYK		01/12/2015
PR ENG:	D. du TOIT Pr. No. 201170110		01/12/2015
PROJECT ENG: MANAGER:	L. PADAYACHEE Pr. No.		01/12/2015
LOCAL PR ENG:			
CLIENT:			

CLIENT

MOZAMBIQUE GAS DEVELOPMENT PROJECT

Anadarko
Moçambique Área 1, Lda

PROJECT
AMA 1
RESETTLEMENT
VILLAGE

DRAWING DESCRIPTION

LAYOUT PLAN AND
LONGITUDINAL SECTION:

ROAD C14 & ROAD C17

SCALE	DATE
AS SHOWN (ORIGINAL DWG SIZE A1)	DECEMBER 2015

DRAWING NUMBER	REV NO
C00290-00-CI-DAL-0001-019	0

ANADARKO DRAWING NUMBER

EA-MZ-CI0000-WOR-E05-00015-19